Haier

Commercial Air Conditioner

Service Manual

Model:

AU282FHAHA

Features:

- Single AC inverter compressor unit
- Central control by one central controller
- Auto-restart
- Max. 5 indoor units can be connected
- Refrigerant: R22
- Super long piping length and large drop between indoor unit and outdoor unit
- Individual operation for every indoor uint, energy saving
- Negative ion generator(optional)

MANUAL CODE:SYJS-019-05 rev. 0 Edition：2005-01-25

splitoff.ru

Большая библиотека технической документации

https://splitsystema48.ru/instrukcii-po-ekspluatacii-kondicionerov.html

каталоги, инструкции, сервисные мануалы, схемы.

CONTENTS

Contents…….....1
1. Description of Products & Features….....……...…….2
2. Specifications……. …….....……6
3. Safety precaution…….....……7
4. Net dimensions of outdoor unit…….....…….....9
5. Installation instructions …….....…. ……..10
6. Parts and functions …….....……..…… ..……..27
7. Remote controller functions…….....28
8. Refrigerant diagram……..…….....29
9. Electrical control functions…….....30
10. Diagnostic information(trouble shooting)…….....42
11. Electrical data.....…….....45
12. Exploded views and parts lists.....……. …….....49
13. Perdormance curves……..... …….....53
14. Noise level charts.....……..... …….....54

Все каталоги и инструкции здесь: https://splitsystema48.ru/instrukcii-po-ekspluatacii-kondicionerov.html

1. Description of product & features

1.1 Nomenclature

A	U	28	2	F	H	A	H	A
1	2	34	5	6	7	8	9	10

1：Product type symbol (A stands for air conditioner)

2：Product model (U stands for air conditioner outdoor unit)

34: Product specification (28 stands for nominal cooling capacity is 28000 BTU)

5：Applicable voltage (2 stands for 1PH/220 V/50 Hz)

6：Product series (F stands for free combination)

7：Appearance character (H stands for 3 HP outdoor unit)

8：Product type (A stands for heat pump type, refrigerant is R22)

9：Design serial number

10：Climate type (A stands for T1 climate)

Все каталоги и инструкции здесь: https://splitsystema48.ru/instrukcii-po-ekspluatacii-kondicionerov.html

1.2 Outdoor unit parameters

Appearance	Model	Refrigerant	Nominal capacity(BTU/h)		Indoor units capacity connected(BTU/h)		Max. indoor units
			cooling	heating	Min.	Max.	
	AU282 FHAHA	R22	28000	32000	14000	36000	5

Note:

1. The designed capacity when installing(total capacity of indoor units connected to outdoor unit) < 130% of rated capacity of the outdoor unit.
2. Total working capacity of indoor units should be not over 100% of rated capacity of the outdoor unit.
3. All the indoor units of the H-MRV series can be matched freely under the 130% of the its cooling capacity(28000Btu/h), but when the matching capacity of indoor units exceeds 100% of the outdoor unit, the efficiency will reduce.

Все каталоги и инструкции здесь: https://splitsystema48.ru/instrukcii-po-ekspluatacii-kondicionerov.html

1.3 Types of indoor units

type	appearance	model	refrigerant	capacity(BTU/h)	
				cooling	heating
Four way cassette		AB092FCAHA	R22	9000	12000
		AB142FCAHA	R22	14000	17000
		AB182FCAHA	R22	18000	21000
Convertible		AC182FCAHA	R22	18000	21000
Ceiling concealed		AE072FCAKA	R22	7000	9000
		AE242FCAKA	R22	24000	28000
		AE092FCAKA	R22	9000	11000
		AE122FCAKA	R22	12000	14000
		AE142FCAKA	R22	14000	16000
		AE182FCAKA	R22	18000	21000
		AE212FCAKA	R22	21000	24000
Cabinet		AP182FAAHA	R22	18000	21000
Wall-mounted	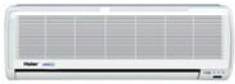	AS062FMAHA	R22	6000	8000
		AS072FMAHA	R22	7000	9000
		AS092FMAHA	R22	9000	13000
		AS122FMAHA	R22	12000	14000
		AS182FTAHA	R22	18000	21000

Все каталоги и инструкции здесь: https://splitsystema48.ru/instrukcii-po-ekspluatacii-kondicionerov.html

1.4. Character of Products

1) The length of horizontal refrigerant pipe can be 35m,the total pipe length can reach 50m, the height difference between indoor units and outdoor unit can reach 30m, the height drop between indoor units can be up to 10m. Refer to the figure below.
2) 1000m super far distance communication between indoor and outdoor units, convenient control and easy to enlarge the scale of units assembly.
3) Indoor units can be controlled separately.
4) Equipped with computer-checking interface, conveniently for service work.

5) Far distance flow of refrigerant, and distribute refrigerant intelligently and reasonably according to the needs of each room, high efficient and energy saving.
6) Display trouble code automatically.
7) Healthy negative ion generation function can refresh the air and excite the oxygen,it is optional.

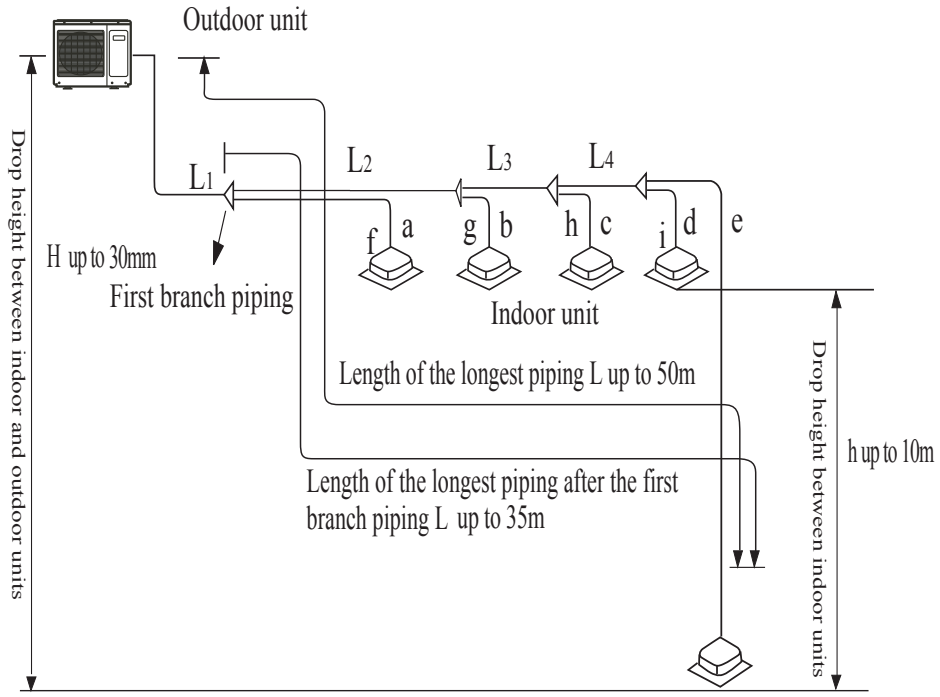

			Permissible value	Piping part
Piping length	Total length of piping (actual length)		50m	$L_1+L_2+L_3+L_4+a+b+c+d+e$
	Longest piping L	Actual length	35m	$L_1+L_2+L_3+L_4+e$
	Piping length of indoor unit which is furthest to the first branch piping L		15m	$L_2+L_3+L_4+e$
Drop height	Drop height between indoor and outdoor unit H	Upper outdoor	30m	_____
		Lower outdoor	20m	_____
	Drop height between indoor units h		10m	_____

Все каталоги и инструкции здесь: https://splitsystema48.ru/instrukcii-po-ekspluatacii-kondicionerov.html

Specifications

Item				Model	AU282FHAHA	
Function					cooling	heating
Capacity				BTU/h	28000	32000
Capacity				W	8000	9500
Sensible heat ratio					/	/
Nominal power input				W	3500	3000
Max. power input				W	4400	3500
EER or COP				W/W	/	/
Dehumidifying capacity				10 - ³×m³/h	/	
Power cable				section	3 X 6 mm^2	
Signal cable				section	2 X (1.0-1.5)mm^2,shielded	
Connecting cable				section	3 X (1-1.5)mm^2	
Wired control cable		For wired control unit		section	3 X (0.5-0.75)mm^2,shielded	
Power source				Ph, V, Hz	1/220/50	
Running /Max.Running				A / A	18/22	16/18
Start Current				A	/	
Class of anti electric shock					Class 1	
Circuit breaker				A	45	
Max. operating pressure of heat side				Mpa	2.65	
Max. operating pressure of cold side				Mpa	2.65	
Outdoor unit	Unit model (color)				WHITE	
	Compressor	Model / Manufacture			THS20MC6-Y/HITACHI	
		Oil model			SUNISO-4GSI	
		Oil type			/	
		Oil charging			720+/- 20ml	
		Type			scroll	
		Protection type			by thermistors	
		Starting method			Inverter,soft-start	
	Fan	Type × Number			Axial fan/1	
		Speed(H-M-L)		r/min	840/780/550	
		Fan motor output power		kW	65	
		Air-flow(H-M-L)		m³/h	3600	
	Heat exchanger	Type / Diameter		mm	Finned,Inner grooved copper/9.52	
		Row / Fin pitch			2/1.5mm	
		Temp. scope		℃	/	
	Dimension	External	（L×W×H）	mm×mm×mm	948X340X830	
		Package	（L×W×H）	mm×mm×mm	1090X410X970	
	Refrigerant control method			mm/mm	EEV+capillary	
	Defrosting				automatic	
	Volume of accumulator			L	/	
	Noise level			dB(A)	57	
	Type of Four way valve				electromagnetic	
	material of reduce noise				/	
	crankcase heater power			W	/	
	Weight (Net / Shipping)			kg / kg	74/89	
PIPING	Refrigerant	Type / Charge		g	R22/2200	
		Recharge quantity		g/m	/	
	Pipe	Liquid		mm	9.52	
		Gas		mm	15.88	
	Connecting Method				Flared	
	Between I.D &O.D	MAX.Drop		m	30	
		MAX.Piping length		m	50	

Norminal condition:
indoor temperature (cooling): 27℃DB/19℃WB, indoor temperature (heating): 20℃DB
Outdoor temperature(cooling): 35℃DB/24℃WB, outdoor temperature(heating): 7℃DB/6℃WB

Все каталоги и инструкции здесь: https://splitsystema48.ru/instrukcii-po-ekspluatacii-kondicionerov.html

3 SAFETY PRECAUTIONS

- Please read these "Safety Precautions" first then accurately execute the installation work.
- Though the precautionary points indicated herein are divided under two headings, △WARNING and △CAUTION those points which are related to the strong possibility of an installation done in error resulting in death or serious injury are listed in the △WARNING section. However, there is also a possibility of serious consequences in relationship to the points listed in the △CAUTION section as well. In either case, important safety related information is indicated, so by all means, properly observe all that is mentioned.
- After completing the installation, along with confirming that no abnormalities were seen from the operation tests, please explain operating methods as well as maintenance methods to the user (customer) of this equipment, based on the owner's manual.

Moreover, ask the customer to keep this sheet together with the owner's manual.

△ WARNING

- This system should be applied to places of office, restaurant, residence and the like. Appliaction to inferior environment such as engineering shop could cause equipment malfunction.
- Please entrust installation to either the company which sold you the equipment or to a professional contractor. Defects from improper installations can be the cause of water leakage, electric shocks and fires.
- Execute the installation accurately, based on following the installation manual. Again, improper installations can result in water leakage, electric shocks and fires.
- When a large air-conditioning system is installed to a small room, it is necessary to have a prior planned countermeasure for the rare case of a refrigerant leakage, to prevent the exceeding of threshold concentration. In regards to preparing this countermeasure, consult with the company from which you purchased the equipment, and make the installation accordingly. In the rare event that a refrigerant leakage and exceeding of threshold concentration does occur,there is the danger of a resultant oxygen deficiency accident.
- For installation, confirm that the installation site can sufficiently support heavy weight. When strength is insufficient, injury can result from a falling of the unit.
- Execute the prescribed installation construction to prepare for earthquakes and the strong winds of typhoons and hurricanes, etc. Improper installations can result in accidents due to a violent falling over of the unit.
- For electrical work, please see that a licensed electrician executes the work while following the safety standards related to electrical equipment, and local regulations as well as the installation instructions, and that only exclusive use circuits are used.
  Insufficient power source circuit capacity and defective installment execution can be the cause of electric shocks and fires.
- Accurately connect wiring using the proper cable, and insure that the external force of the cable is not conducted to the terminal connection part, through properly securing it. Improper connection or securing can result in heat generation or fire.
- Take care that wiring does not rise upward, and accurately install the lid/service panel. Its improper installation can also result in heat generation or fire.

Все каталоги и инструкции здесь:

SAFETY PRECAUTIONS

△ WARNING

- When setting up or moving the location of the air conditioner, do not mix air etc. or anything other than the designated refrigerant (please see nameplate) within the refrigeration cycle.
- Rupture and injury caused by abnormal high pressure can result from such mixing.
  Always use accessory parts and authorized parts for installation construction. Using parts not authorized by this company can result in water leakage, electric shock, fire and refigerant leakage.
- The position of indoor unit must be above the floor 2.5m.

△ CAUTION

- Execute proper grounding. Do not connect the ground wire to a gas pipe, water pipe, lightening rod or a telephone ground wire.
  Improper placement of ground wires can result in electric shock.
- The installation of an earth leakage breaker is necessary depending on the established location of the unit. Not installing an earth leakage breaker may result in electric shock.
- Do not install the unit where there is a concern about leakage of combustible gas.
  The rare event of leaked gas collecting around the unit could result in an outbreak of fire.
- For the drain pipe, follow the installation manual to insure that it allows proper drainage and thermally insulate it to prevent condensation. Inadequate plumbing can result in water leakage and water damage to interior items.

Все каталоги и инструкции здесь: https://splitsystema48.ru/instrukcii-po-ekspluatacii-kondicionerov.html

4. Dimensional drawing of outdoor unit

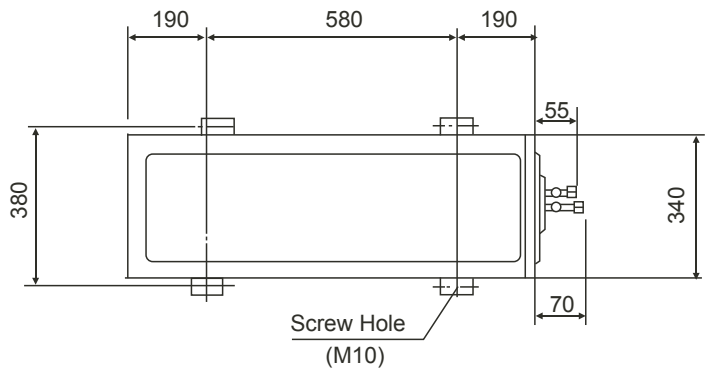

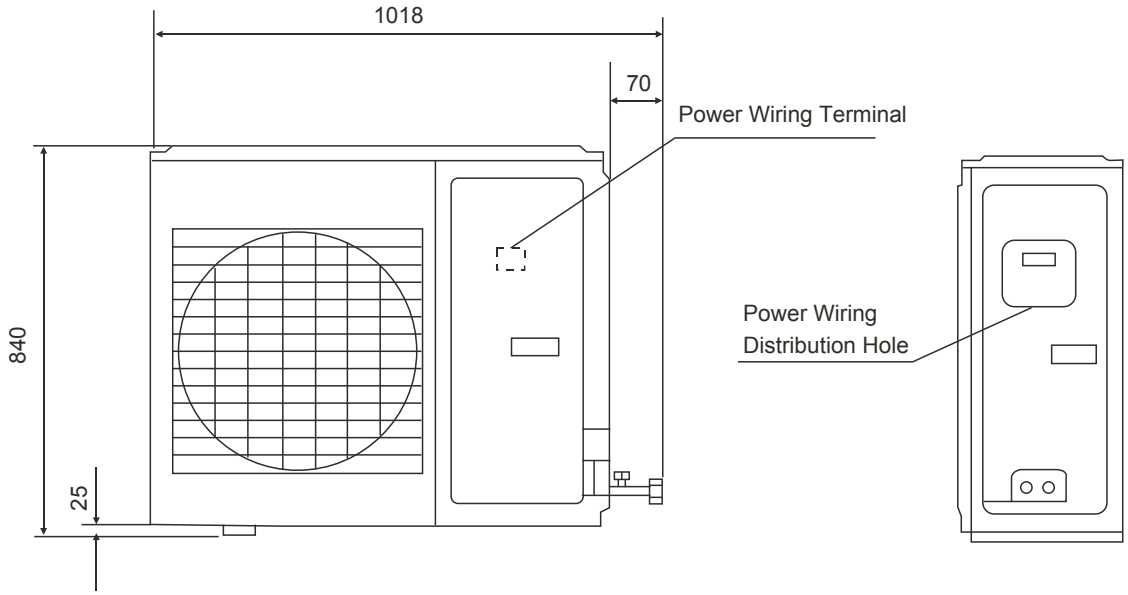

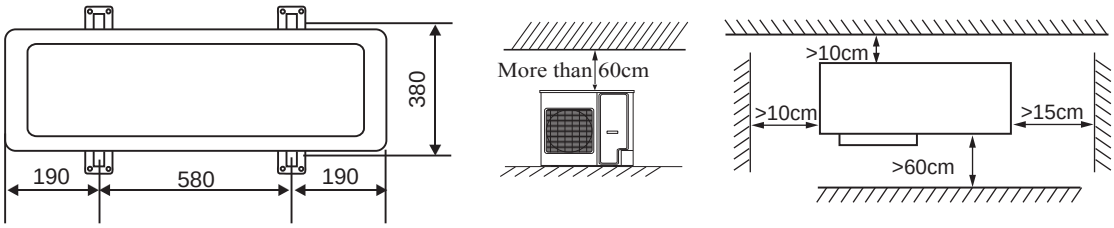

Installation dimension
of outdoor unit (mm)

Все каталоги и инструкции здесь: https://splitsystema48.ru/instrukcii-po-ekspluatacii-kondicionerov.html

5. Installation instructions

5.1 Installation diagram of indoor & outdoor unit

Notice:

1. Designed capacity (total capacity of the whole connected indoor units) while installation should be not over 130% of rated capacity of the outdoor unit .
2. Total capacity of all running indoor units during usage should be not over 100% of rated capacity of the outdoor unit.

The following is examples:

1) Model: Indoor unit AS092FMAHA AP182FAAHA

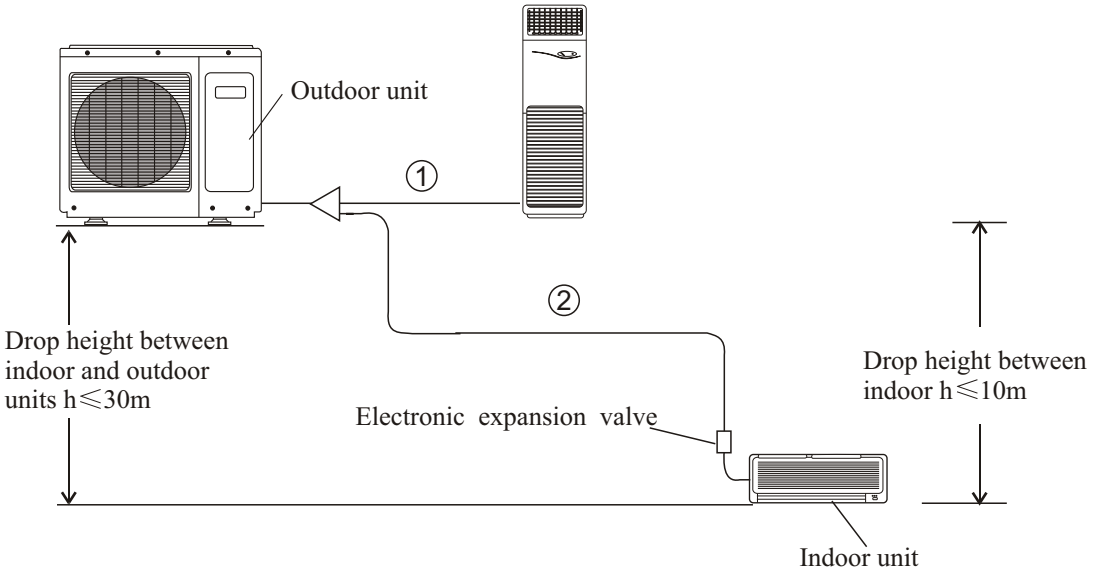

2) Model: Indoor unit AS092FMAHA AB142FCAHA

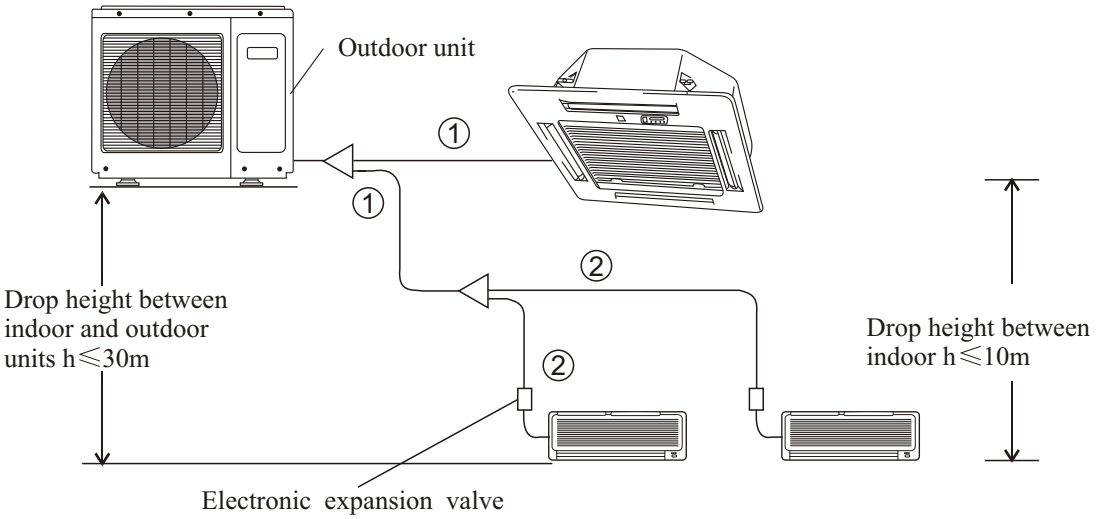

Все каталоги и инструкции здесь: https://splitsystema48.ru/instrukcii-po-ekspluatacii-kondicionerov.html

3) Model: Indoor unit AS092FMAHA AC142FCAHA

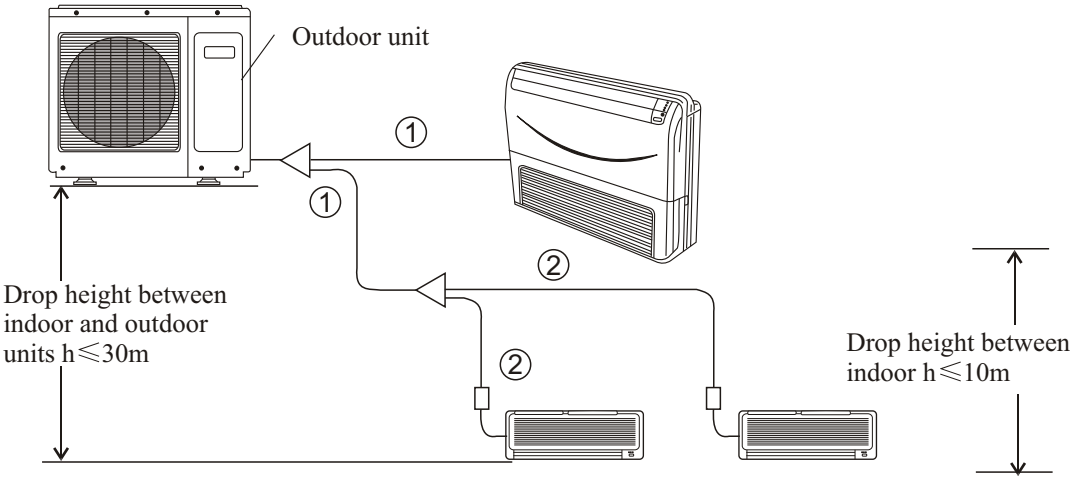

4) Model: Indoor unit AS092FMAHA AS142FTAHA

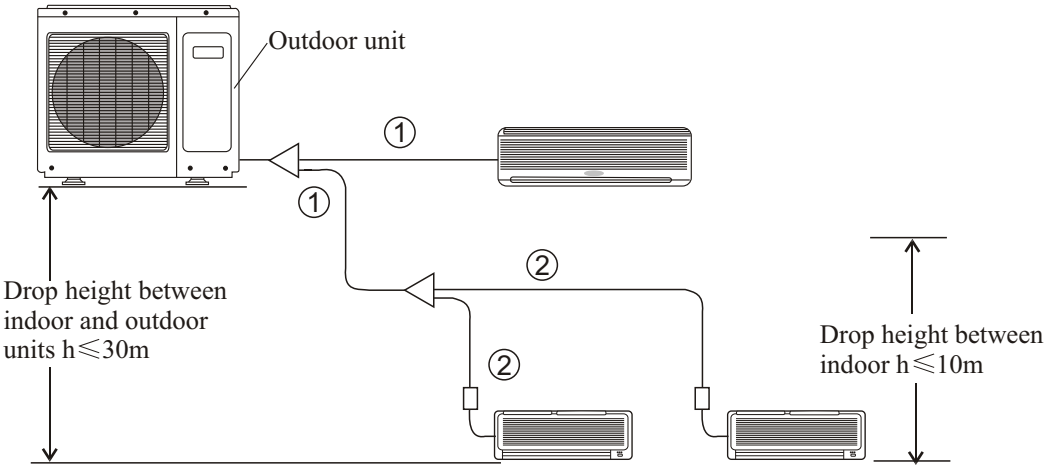

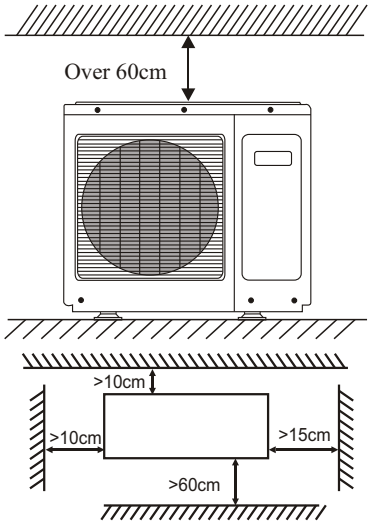

Position \ Pipe	Gas pipe	Liquid pipe
Part ①	∅15.88mm	∅9.52mm
Part ②	∅12.7mm	∅6.35mm

Все каталоги и инструкции здесь: https://splitsystema48.ru/instrukcii-po-ekspluatacii-kondicionerov.html

5.2 Piping dimensions charts

model	liquid pipe		gas pipe	
	mm	inch	mm	inch
AU55	9.52	3/8"	19.05	3/4"
AB09	6.35	1/4"	12.7	1/2"
AB14	6.35	1/4"	12.7	1/2"
AB18	9.52	3/8"	15.88	5/8"
AC18	9.52	3/8"	15.88	5/8"
AE07	6.35	1/4"	9.52	3/8"
AE09	6.35	1/4"	9.52	3/8"
AE12	6.35	1/4"	12.7	1/2"
AE14	6.35	1/4"	12.7	1/2"
AE18	9.52	3/8"	15.88	5/8"
AE21	9.52	3/8"	15.88	5/8"
AE24	9.52	3/8"	15.88	5/8"
AP18	9.52	3/8"	15.88	5/8"
AS06	6.35	1/4"	9.52	3/8"
AS07	6.35	1/4"	9.52	3/8"
AS09	6.35	1/4"	12.7	1/2"
AS12	6.35	1/4"	12.7	1/2"
AS18	9.52	3/8"	15.88	5/8"

5.3 Y-shape manifold pipe

model: FQG-B120

<gas side>

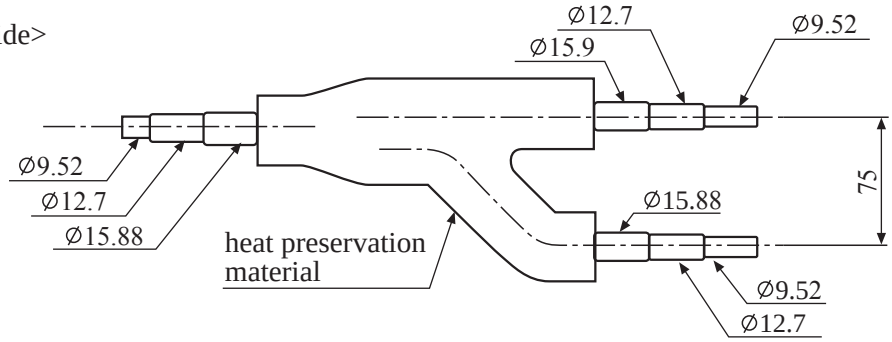

<liquid side>

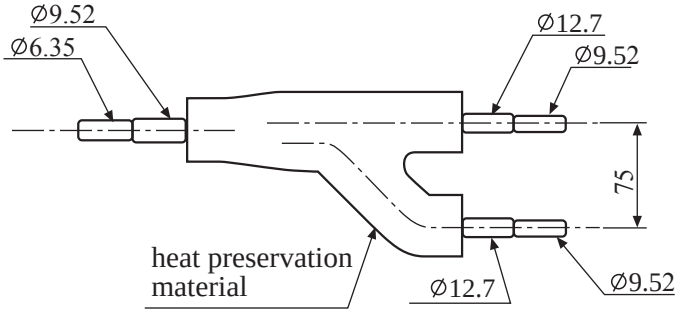

Dimension is the out diameter connecting to the tubing.

Все каталоги и инструкции здесь: https://splitsystema48.ru/instrukcii-po-ekspluatacii-kondicionerov.html

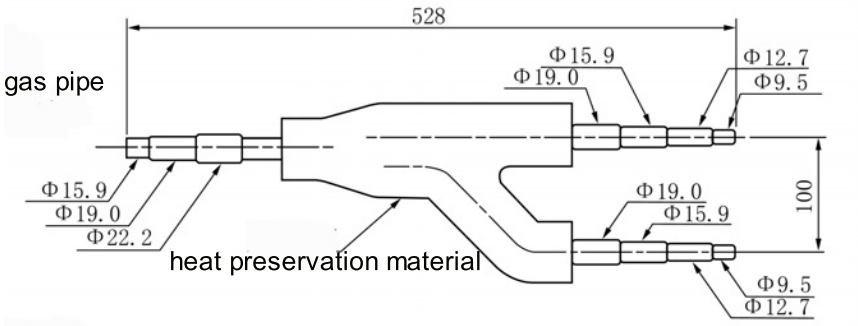

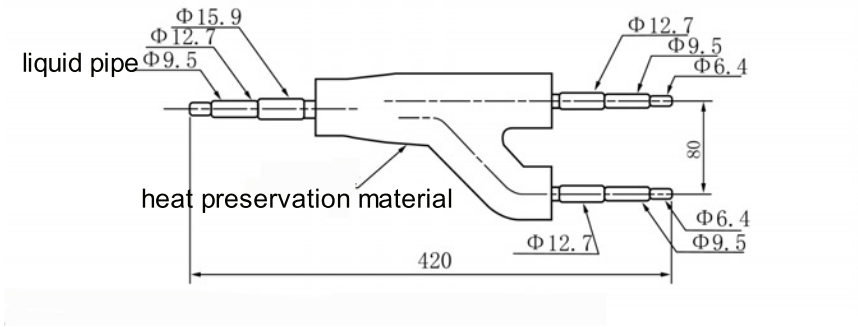

Refrigerant pipes between manifold pipes

Total refrigerating amount of indoor unit group after the manifold pipe	Gas side	Liquid side
Less than 38220Btu/h	15.9	9.52
38220~61157Btu/h	19.05	9.52
61157~126137Btu/h	25.4	12.7

Note: 1. Y-shape manifold pipe can be placed in horizontal or vertical direction

2. The manifold pipes must be welded with hard-solder

3. Pay attention to cut off the unnecessary part from its middle parts of each joint, and to remove burr.

Все каталоги и инструкции здесь: https://splitsystema48.ru/instrukcii-po-ekspluatacii-kondicionerov.html

In the file, the figure marked with " √ " is permitted, and the figure marked with "×" is prohibited.
You can confirm the position according to the actual condition.
The refrigerant flow direction is always from the collective side to the divided side.

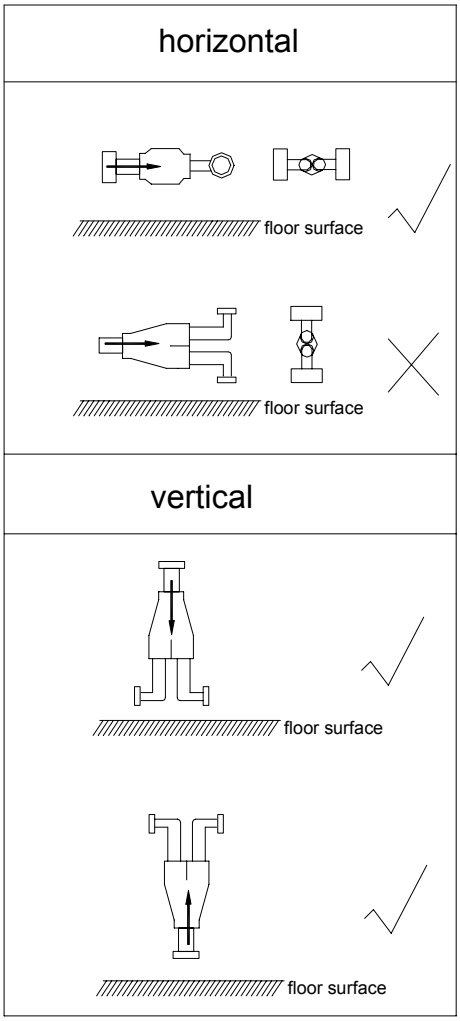

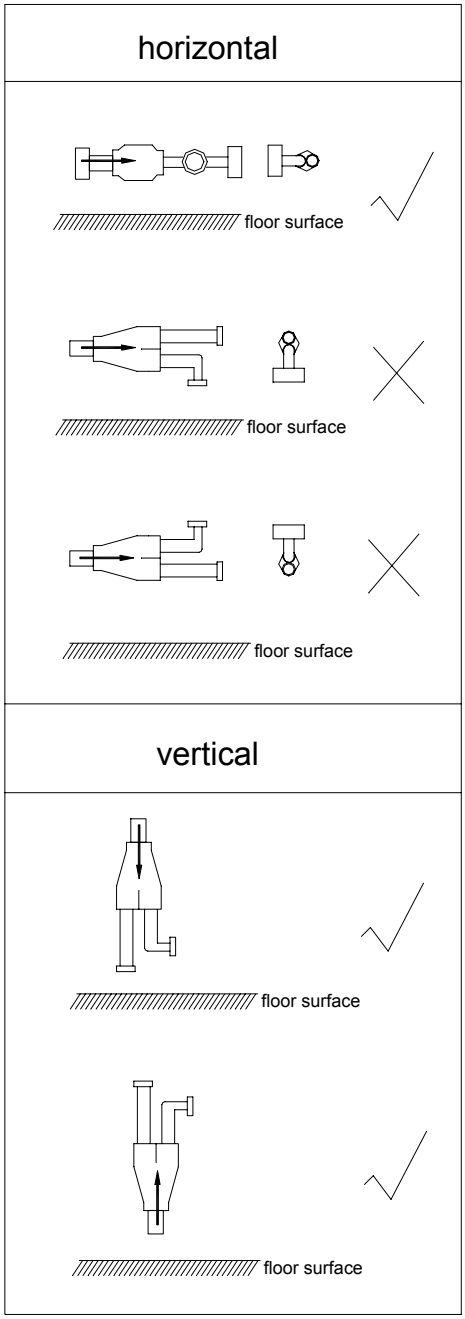

Все каталоги и инструкции здесь: https://splitsystema48.ru/instrukcii-po-ekspluatacii-kondicionerov.html

5.4 The Order of Installation Work

Item	Work	Main points
Before installation	Work division	-to ascertain the person responsible for installation of pipes and wiring
	Make installation diagram	-to ascertain the pipe installation dimension and position of electronic expansion valve, to make control wiring system diagram
Work	Installation of indoor and outdoor unit	-to prevent the ventilation from short circuit and guarantee repair space
	Refrigerant pipe work	-Pay attention to dry, clean and seal
	Drain pipe work	-Slant downward
	Heat insulation work	-No gaps in the joint of heat insulation material
	Wiring work (control wire, power cord)	-Choose the proper wire and cord
	Set every set switch	-Should be complied with control wiring system diagram
	Airtight test	-Close all the gas, liquid valves
	Vacuum drying	-Should the vacuum pump that can reach 200Pa vacuity
	Additional refrigerant	-Write down the additional refrigerant amount on the outdoor unit body and record table
	Test run adjustment	-Do test run to indoor unit one by one to verify if there is wrong pipes
	Training of use and maintenance	-Explain to user, simultaneously provide all the documents

The above work order is general knowledge, they may be changed to be complied with the specific work site.

5.5 Attentive matters of safety

- Before installing, do read this [Attentive matters of safety] carefully to guarantee the proper installation.
- The below attentive matters are divided into [warning] and [note] two parts. When the wrong installation occur, it is very possible death and severe injury and other serious accidents will happen. For those items are listed in [warning] part. But even the items listed in [note] part can also cause serious accidents. Above all, both the two parts are very important contents related to safety, so they must be obeyed.
- After installation, do test run to verify everything is normal, after that please explains the use method and maintenance method to the user according to the operation manual. Additionally, give the installation manual together with operation manual to the user and ask them to keep them properly.

Warning

- The distributing shop, where you bought the air conditioner, or the specified shops shall do the installation work. If you do the installation work by yourself, the improper installation will cause water leakage, electric shock fire and other accidents.
- The installation work shall be in line with what the installation manual specified. If installation is not proper, water leakage, electric shock, fire and other accidents will occur.
- Install the air conditioner to a place where can definitely stand its weight. Places not firm enough will cause drop down of unit resulting in body hurt.
- The installation work shall be preventive to typhoon and earthquake. If the installation

Все каталоги и инструкции здесь: https://splitsystema48.ru/instrukcii-po-ekspluatacii-kondicionerov.html

work is not met with the requirements, overturn of the unit will occur resulting in accidents.

- The wiring work shall be done by a qualified person and referred to the “technical standard of electric equipment”, “indoor wiring regulation” and what the manual specified. Do use special circuit. If the capacity of the circuit is not enough or bad work, electric shock, fire and other accidents will happen.
- Using the specified cable to do wiring work and connecting firmly and properly. Fix the connecting part of the terminals to prevent it from the external force. Improper connection and fixing will cause heating and fire etc. accidents.
- Wiring shall be kept in correct shape avoiding extrusion. After installation, the electric box cover and the external panel shall not nip the wire. Improper installation will cause heating and fire etc. accidents.
- When setting or moving the air conditioner do not let the air and things alike get into the refrigeration system except the specified refrigerant (R22). If air and other things enter, abnormal high pressure will occur, which easily cause break and body injuries etc. accidents.
- When installing, do use the accessories or specified parts. If not using the parts specified by our company, water leakage, electric shock, fire and refrigerant leakage will occur.
- Do not lead the drainpipe to drain where the sulfur gas may be involved. Otherwise, the poisonous gas will enter into the indoor.
- During installation, if refrigerant leakage occurs, do the ventilation work immediately. As soon as the refrigerant gas meets fire, poisonous gas will be produce. If the refrigerant gas enters into room and meet the air blowing heater, heater or stove etc. fire source, the poisonous gas may be produced. After installation, confirm there is no leakage of refrigerant.
- Do not install the unit in a place where the combustible gas may be leaked. In any case the combustible gas leaks and accumulated around the unit, fire accident will occur.
- Do heat insulation work to the refrigerant gas pipes and liquid pipes to reach the purpose of heat preservation. If the heat insulation measure is not sufficient, water generated by condensing dew will drip leading to wet the floor and indoor articles.
- Do not damage the power line or change it arbitrarily to avoid occurrence of fire or electric shock.
- Do not extend the power line or using other electric appliance in the same power receptacle to avoid fire or electric shock.

Note

- Do grounding work. Do not connect the grounding wire to gas pipe, tap, lighting rod or telephone line. Improper grounding will cause electric shock.
- In some places the electric leakage breaker shall be installed. If do not install the breaker, electric shock may occur.
- After installation, power on to do electric leakage detecting test.

Все каталоги и инструкции здесь: https://splitsystema48.ru/instrukcii-po-ekspluatacii-kondicionerov.html

5.6 Installation procedure Connection of pipes

⚠ Warning

● During installation, if refrigerant leakage occurs, take ventilation measurement immediately. ● As soon as the leaked refrigerant gas meets fire, poisonous gas will generate.	● After finishing installation, confirm the refrigerant gas does not leak. ● If the refrigerant gas leaks in the room, once it meets heater, burner and gas stove etc. fire source, the poisonous gas will generate.

I. Choosing of pipes

The choosing of pipe material, dimension and branch pipe shall be complied with the installation figure in page 4~5.

II. Connection of pipes

1 Method of pipe connection

- The pipe shall be as short as possible to guarantee efficiency.
- Daub the refrigerant oil on the connection and flare nut.
- When bending the pipes, give the roundness as large as possible, to avoid crashing the pipes.
- To connect the pipe, fit the center and screw the nut with hand, then use spanner or torque wrench to tighten it. The fastening torque as shown in below table. As shown in figure.
- Be careful alien matters, such as sands, water etc.shall not enter the pipes.

Forced fastening without careful centring may damage the threads and cause gas leakage.

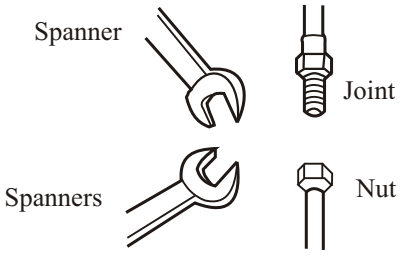

2.Welding of pipes

(1) In welding, the nitrogen shall be used to avoid oxidation of the pipe inner part.

(2) The refrigerating pipe shall use clean new pipes. When working, it shall take steps to prevent water and dust from entering.

(3) When loosening and tightening the nuts, two spanners shall be used. If using one spanner, it can not reach the desired degree of tightness.

Using the specified fastening torque to fasten nuts.

Pipe diameter(mm)	Installation torque(N.m)	Fastening torque(N.m)
Φ6.35	11.8(1.2kgf.m)	13.7(1.4kgf.m)
Φ9.52	24.5(2.5kgf.m)	29.4(3.0kgf.m)
Φ12.7	49.0(5.0kgf.m)	53.9(5.5kgf.m)
Φ15.88	78.4(8.0kgf.m)	98.0(10.0kgf.m)

Все каталоги и инструкции здесь: https://splitsystema48.ru/instrukcii-po-ekspluatacii-kondicionerov.html

Installation procedure Connection of pipe

3.Method of cutting and flaring pipe

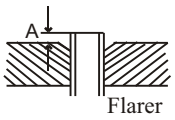

Diameter of pipe	Dimension A(mm)
Ø 6.35mm(1/4")	0.8~1.5
Ø 9.52mm(3/8")	
Ø 12.70mm(1/2")	2.2~2.6
Ø 15.88mm(3/4")	

Cutting and flaring pipe
If using pipe cutter, the burs must be removed.

- After inserting flaring machine, flare pipe nozzle to be bell-mouthed.
- When using branch pipes, do installation work in the directions shown in the below figures.

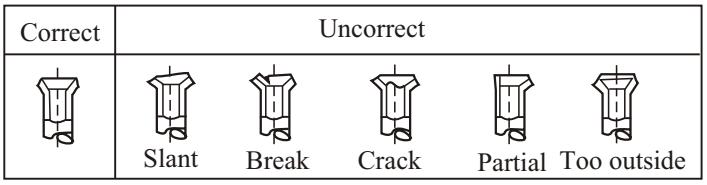

- When using branch pipe, please install it as shown in the following Fig.

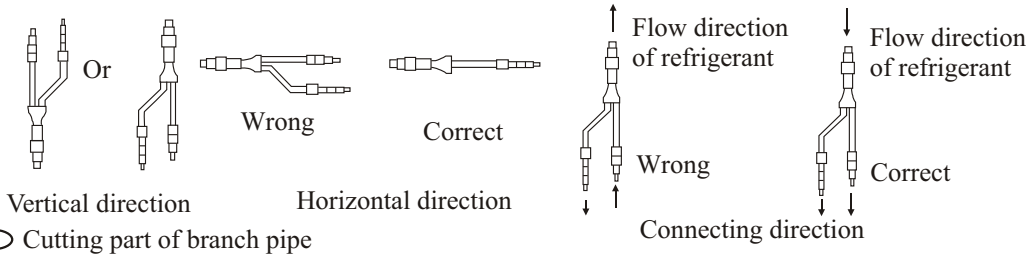

- Cutting part of branch pipe
  Cut the connection part off centrally, and remove the burs.

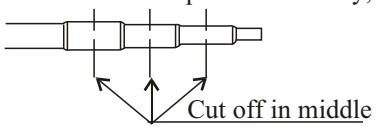

For the cutting of branch pipes, it is necessary to use micro-cutter.

Heating insulation of pipes
Insulation of branch pipe part;after connection the attached heat insulation materials of the branch pipe with the site pipes, bind them properly.

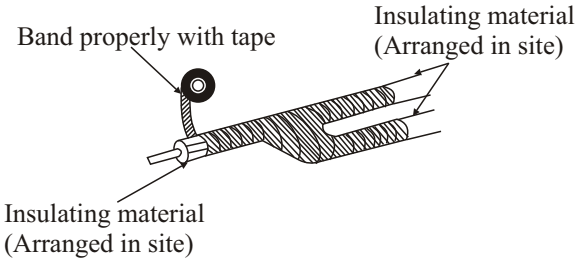

- When joint connecting, no gap shall be left in the joint, the insulating material shall be overlapped.

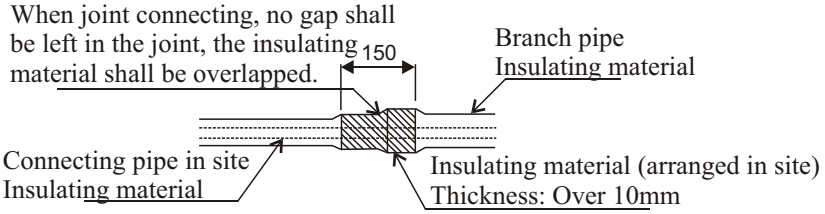

Все каталоги и инструкции здесь: https://splitsystema48.ru/instrukcii-po-ekspluatacii-kondicionerov.html

Installation procedure Connection of pipes

4.Pipe connection of the outdoor unit.
Referring to the installation diagram in page 4, connect the indoor unit, outdoor unit, manifold pipe and electronic expansion valve together by using the pipe connection method and welding method.

III Test of airtight quality

After connection of the refrigerant pipes, carry out airtight quality test. In this test, pressurize to the pipes as shown in the below figure by using nitrogen tank.

- Close the valves of the gas side and liquid side totally.
  The nitrogen may enter the cycle system of the outdoor unit, so that, before pressurizing, the valve rods must be fastened.(Both the gas side and liquid side)

- For each of the refrigerant system, pressurize from the discharge valve of gas side in procedure.

- When doing airtight quality test, it is absolutely forbidden to use oxygen, flammable gas and poisonous gas.

- If the hi-pressure valve of the outdoor unit is 3-way valve.

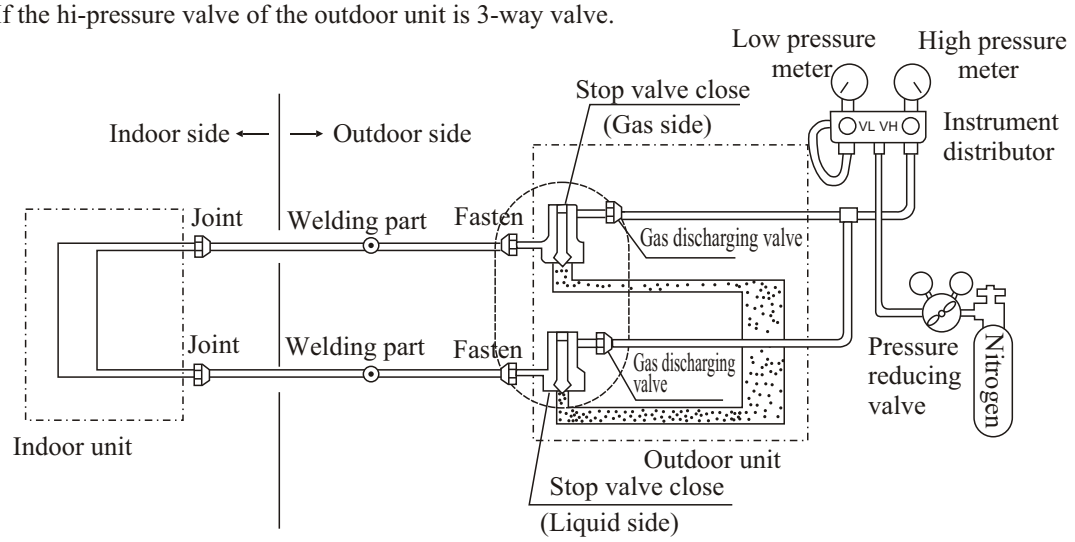

- When the hi-pressure valve of the outdoor unit is 2-way valve.

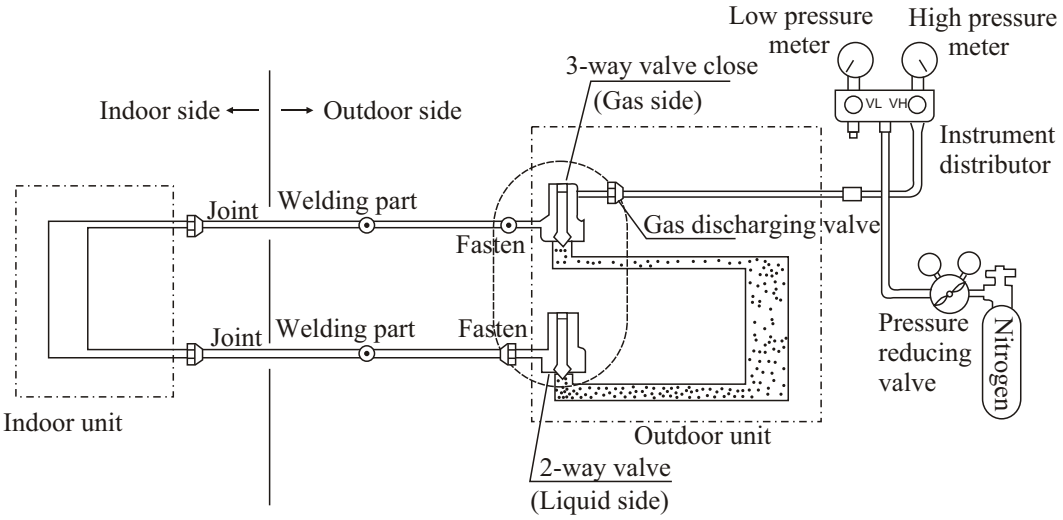

Все каталоги и инструкции здесь: https://splitsystema48.ru/instrukcii-po-ekspluatacii-kondicionerov.html

Installation procedure Connection of pipes

IV Vacuumizing of the pipes and indoor unit (using vacuum pump to vacuumize, it is strictly forbidden to use refrigerant purging)

- Choose of vacuum pump: it shall choose those that can reach a good vacuity (Lower 200Pa) and have a large air discharge amount (over 40L/min).
- After finishing the airtight quality test and discharging the nitrogen, connect the instrumental diverter to the 3-way discharge valve, then connect the vacuum pump according to the below figure.
- If the hi-pressure valve of the outdoor unit is 3-way valve.

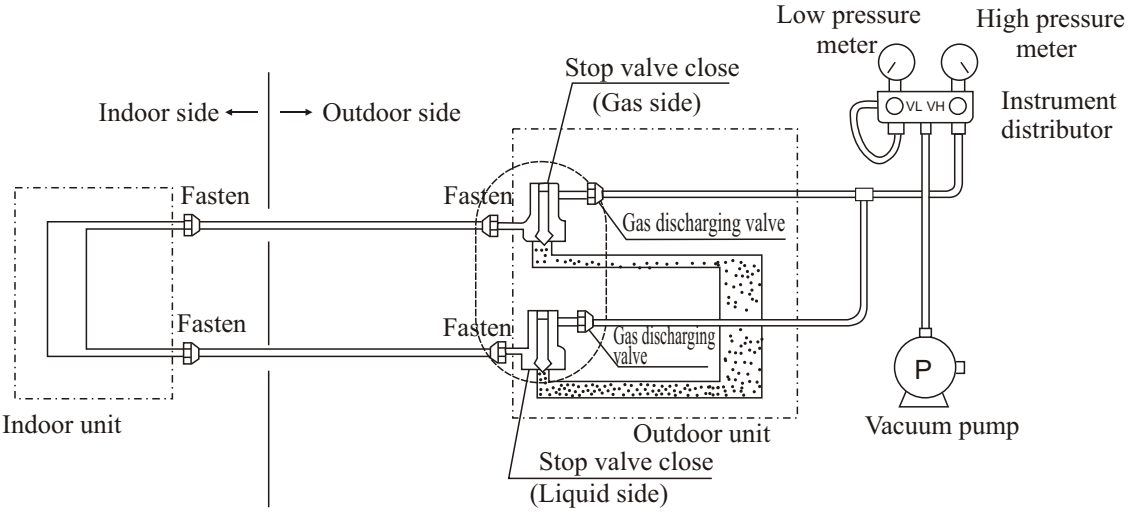

- When the hi-pressure valve of the outdoor unit is 2-way valve .

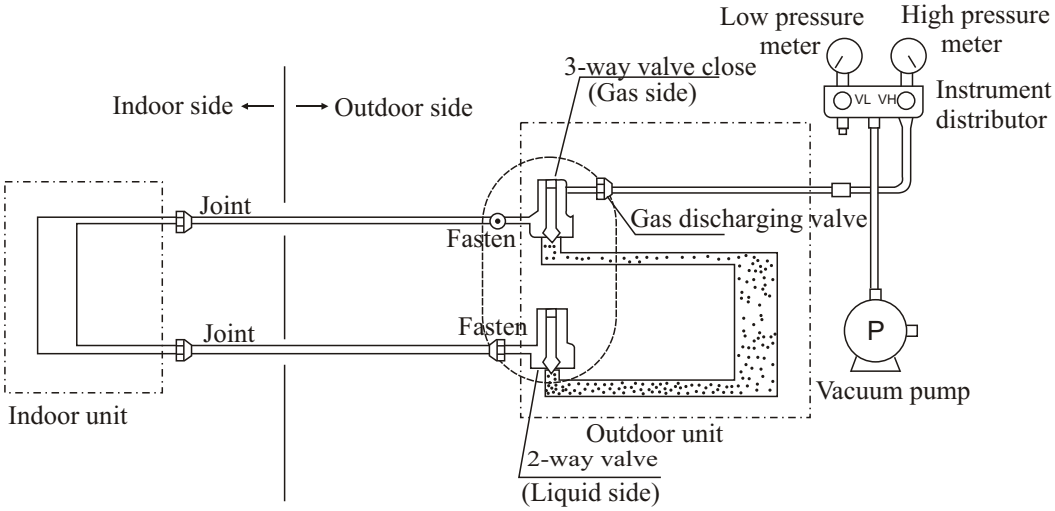

- When the hi-pressure valve of the outdoor unit is 2-way valve:
  (1) Firstly connect indoor, outdoor power supplies, and communication lines, then set addresses of indoor units and check their correctness.
  (2) Determine running mode according to indoor temperature: Set to cooling mode when indoor temperature Ta≥ 23℃； set to heating mode when Ta<23℃.
  (3) Keep stop valve of outdoor unit close , and start the indoor unit according to running mode determined by indoor temperature.

Все каталоги и инструкции здесь: https://splitsystema48.ru/instrukcii-po-ekspluatacii-kondicionerov.html

Installation procedure Connection of pipes

(4) Watch the status of outdoor unit compressor, disconnect the general power supply for the air conditioner assembly after the compressor unit starts.

- If the hi-pressure valve of the outdoor unit is 3-way valve:
  Without starting the machine, simply exhaust to vacuum (vacuum degree<200Pa) directly from hi-presser and low-pressure valves(strictly in compliance with operation steps defined in instruction manual for outdoor unit) after machine connecting pipe is well done.

- Vacuumize 2~3 hours according to the length of the pipe. When vacuumizing, confirm the gas side and liquid side of the 2-way valve and 3-way valve shall be in full close state.
- When it is not lower than 200Pa after 2 hours or more vacuumizing, vacuumize for another 1 hour. If after more than 3 hours vacuumizing it is still not lower than 200Pa, the leak part shall be found.
- When it is lower than 200Pa after more than 2 hours vacuumizing, close both the valve VL and VH of the diverter, then close the vacuum pump. Place it there to observe if the vacuity changes. If it changes, it indicates leakage exists, so the leak part shall be found.
- After finishing the above vacuumizing work, replace the vacuum pump with refrigerant tank and turn to the refrigerant charging procedure.

V Charging of refrigerant

1.Calculation of additional charging amount of refrigerant

After finishing vacuumizing work, replace the vacuum pump with refrigerant tank and turn to the refrigerant additional charging procedure.

Calculation of additional charging amount of refrigerant

Quantity of filled refrigerant before the machine leaving factory does not consider supplement for extension tubes while spot installation. After practical installation is finished, it is necessary to fill supplement refrigerant into extension tubes provided that the length of spot liquid tube>0m. Filling method is as the following.

Calculation method:

Quantity of supplement refrigerant is determined by specification and actual length of the spot liquid tube.

Calculation formula:

Quantity of spot supplement refrigerant = actual length × necessary supplement refrigerant quantity per meter of the tube.

e.g.:Quantity of spot supplement refrigerant(R22)
=(L1×0.030kg/m)+(L2×0.065kg/m)
L1: Actual total length of Φ6.35 liquid tube
L2: Actual total length of Φ 9.52 liquid tube

Specification of liquid tube	Necessary supplement quantity of refrigerant per meter
Ø 6.35mm	0.030kg
Ø 9.52mm	0.065kg

2.Charging of refrigerant

- Close all valves of outdoor unit, and charge refrigerant from air discharge valve of gas side.
- When can not charge the specified amount, firstly, open all the valves, both liquid side and gas side, of outdoor unit,then switch the valve of gas side to close state a little.Under this condition, do cooling operation and charge refrigerant from the discharge valve of gas side. At this time, adjust the valve of the refrigerant tank to make the refrigerant in Gas State when it is absorbed by system.
- When refrigerant leakage making refrigerant lack in system occurs, All the of the system shall be recovered and recharge it according to specified amount.

3.Opening of the refrigerant pipe

- Open all the valves of outdoor unit

Все каталоги и инструкции здесь: https://splitsystema48.ru/instrukcii-po-ekspluatacii-kondicionerov.html

Installation procedure

Refrigerant

MRV central air conditioner uses refrigerant "R22". This refrigerant itself is innocuous, noncombustible safety refrigerant. But then, when arranging the air conditioner equipment, it is necessary to take some steps to take precautions against in case of the indoors refrigerant leakage. Such as, the room size shall be taken into account to avoid making the concentration of the refrigerant not exceed the concentration limit and other relevant steps. The concentration limit is the concentration that is not harmful to human body and can take emergency steps to treat the concentration of Freon.

Concentration limit of R22 :0.3kg/m^3

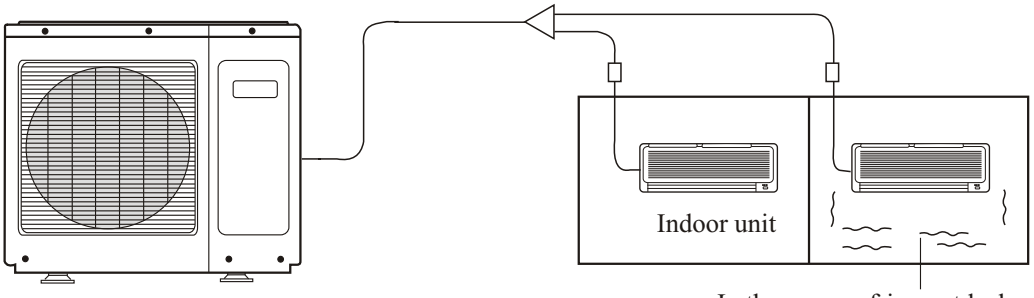

In the room refrigerant leaks, all the refrigerant leaks out.

1.Sequence of refrigerant concentration affirmance

Calculate the refrigerant concentration according to the following sequence.

(1) Calculate the total refrigerant-charging amount of each of the refrigerating system(kg).

※ Refrigerant charging amount of outdoor system + Additional refrigerant charging amount =Total refrigerant charging amount of the refrigerating equipment(kg).

Refrigerant charging amount of outdoor system: Refrigerant charging amount when air conditioner leaves factory.

Additional refrigerant charging amount: Additional refrigerant charging amount according to the site pipe length and pipe diameter.

(2) Calculate the minimum size of the room suitable for the indoor unit assembly(m^3).

(3) Calculate the concentration of refrigerant:

Total refrigerant charging amount of refrigerating equipment/the minimum room size suitable for indoor unit assembly(m^3)≤Refrigerant concentration limit:0.3kg/m^3

2.Countermeasure when exceeding the concentration limit

(1) Set an effective opening for ventilation and fresh air.

- Cut an intake respectively on the upper and lower part of the door which areas are equivalent to 0.15% grounding area, or cut an intake in other part of the room.

(2) Reduce the total refrigerant charging amount of the refrigerating equipment

- Shorten the refrigerant pipe length. Reduce the installation place distance between the outdoor unit and the indoor unit to shorten the refrigerant pipe length, so that reduce the total refrigerant charging amount of the refrigerating equipment.

(3) Establish ventilation and fresh air system

- Establish a mechanical equipment for fresh air to keep the refrigerant concentration below the concentration limit (normal ventilation).
- When can not ventilate the normally, please set an alarm apparatus linked with the mechanical ventilation equipment.

Все каталоги и инструкции здесь: https://splitsystema48.ru/instrukcii-po-ekspluatacii-kondicionerov.html

5.7 Electric wiring

Electric wiring

Note:

- The air conditioner must use special circuit (over 45A), and wiring by the qualified electrician according to the wiring rules specified in national standard.
- The grounding wire and the neutral wire shall be strictly separated. Connect the neutral wire with grounding wire is incorrect.
- The electric leakage breaker must be installed.
- All the electric wire must be copper wire. When wiring, there shall keep a proper distance between the power line and communication wire to avoid twist together. Otherwise, signal disturbance will occur, and the air conditioner can not operate normally.
- Power supply: 1PH, 220-230V~, 50Hz, the power supply connects from the outdoor side.
- The wiring method of power line is Y connection. If the power line is damaged, in order to avoid risk of electric shock, it must be replaced by the manufacturer or its repair center or other similar qualified person.
- Specification of wire and short circuit protector in site wiring:
- Fuse: T.45A/250VAC

Type / Contents	Power line	Connection wire	Connection signal wire	Short circuit protector
Specification	H07RN-F	H05RN-F	....	....
Parameter	3G6mm^2	3G(1~1.5mm^2)	2x(1.0~1.5mm^2)	45A

Note: The signal wire must be shielded.

Wiring method

1. Wiring method of orbicular terminals
   For the connection wire with orbicular terminals, its wiring method is as shown in the right figure: remove the connecting screw, put the screw through the ring on the end of the wire, then connect to the terminal block and fasten screw.

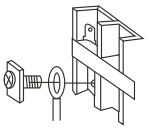

Wiring Method for Ring Terminal Block

2. Wiring method of straight terminals
   For the connection wire without orbicular terminals, its wiring method is: loosen the connection screw, and insert the end of the connection wire completely into the Terminal block, then fasten the screw. Slightly pull the wire outwards to confirm it is firmly held

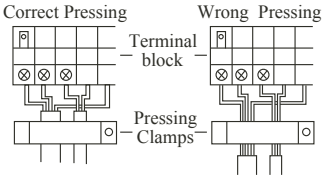

3. Crimp connection method for wires without terminals

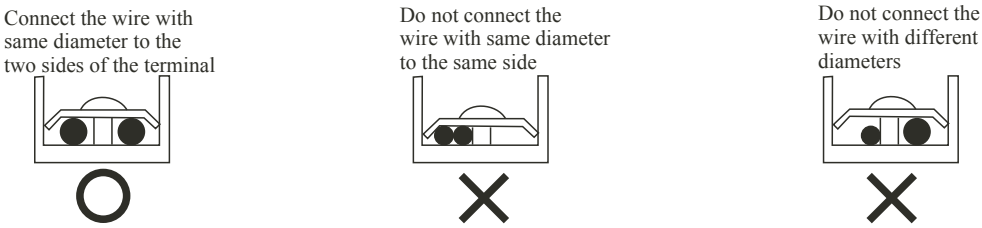

Crimp connection method for connection wire

After connection, the wire must be fastened by wire cover. The wire cover shall press on the protection coat of the connection wire, as shown in right top figure.

Note: When connecting the wiring, confirm the terminal number of indoor and outdoor units carefully. The terminals with same number and color connect with a same wire. Incorrect wiring will damage the controller of air conditioner or the unit can not operate.

Все каталоги и инструкции здесь: https://splitsystema48.ru/instrukcii-po-ekspluatacii-kondicionerov.html

Wiring method of outdoor unit:

- Power line (connects from outdoor unit)
  Remove the repair board of the outdoor unit and loosen the wire cover A,then put the live wire, neutral wire and grounding wire through the wire cover A,and connect them to terminal block correspondingly. After connection, fasten wire cover A to its previous state.
- Power line and communication wire of indoor unit
  Loosen wire cover B ,put the power line and communication wire through the wire cover B, and connect them to terminal block correspondingly. After connection, fasten wire cover B to its previous state.
  Note: Power line, connection wire and communication wire are provided by consumers themselves.

Wiring method of indoor unit

※ Power line and communication wire of indoor unit

- Loosen wire cover and connect the power line and communication wire of indoor unit to the terminal correspondingly.

※ Drive wire of electronic expansion valve(for split type)

- Air-connect the drive wire of electronic expansion valve with the down-lead from the control base board of indoor unit.
  After the above connection,fasten the wire cover to its previous state.

Wiring method of electronic expansion drive(for split type)

Open the box cover of the drive and put the drive wire of electronic expansion valve through the rubber ring, then correspondingly connect the connection wire with the terminal of control base board of the drive. Use nut to connect the grounding wire on the drive box and use wire clamp to fasten the wire. Put on the cover, the wiring connection is finished.

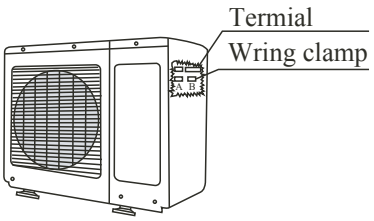

Все каталоги и инструкции здесь: https://splitsystema48.ru/instrukcii-po-ekspluatacii-kondicionerov.html

5.8 Wiring diagram

Note:
When connecting power line to power supply terminal, please pay attention to the following items:

1. Do not connect the power line with different dimensions to the same connection wire end. Improper contact will cause heat generation.
2. Do not connect the power line with different dimensions to the same grounding wire end. Improper contact will affect protection.
3. Keep a proper distance between the communication wire and the power line. Otherwise, abnormal communication will occur because of disturbance.
4. Do not connect the power line to the connecting end of communication wire. Incorrect connection will cause damage of connected unit.
   Wiring example diagram:

Wiring example diagram:

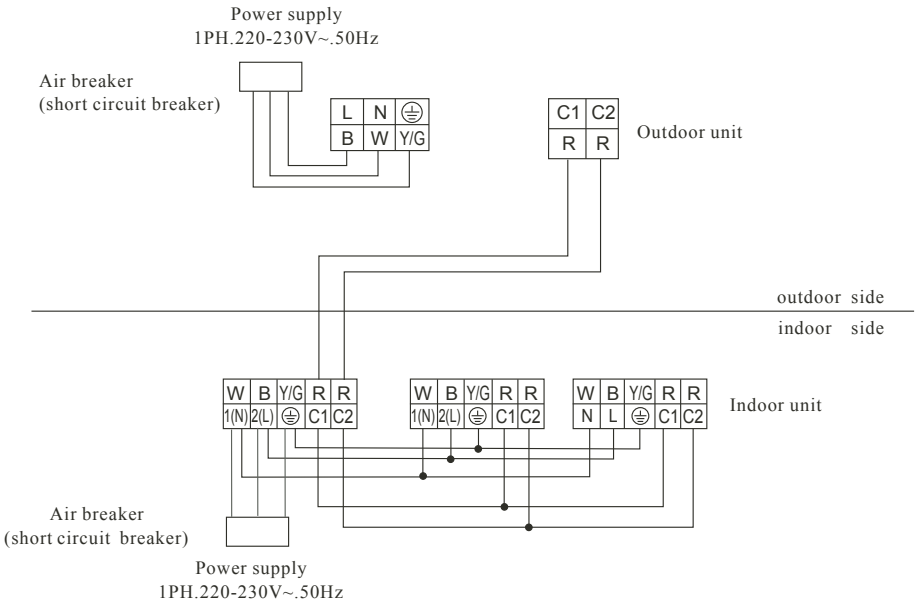

W:White

B:Black

R:Red

Y/G:Yellow/Green

Все каталоги и инструкции здесь: https://splitsystema48.ru/instrukcii-po-ekspluatacii-kondicionerov.html

5.9 Check work

After installation,please fill in the following form for easy daily maintenance:

No.	Model of indoor unit	Factory No. of unit	Site setting No.
1			
2			
3			
4			
5			

Check for installation and test run

Please operate the air conditioner according to the operation manual.

Check items for test run, put mark √ in □ .

- □ Gas leakage from pipe connection?
- □ Heat insulation treatment of pipe connection?
- □ Are the connection wiring of indoor and outdoor unit firmly inserted into the terminal block?
- □ Is the connection wiring of indoor and outdoor firmly fixed?
- □ Is drainage securely arranged?
- □ Is the ground wire securely and firmly connected?
- □ Is power supply voltage abided by electric code?
- □ Is there any noise?
- □ Does cooling perform normally?
- □ Does room temperature regulator operate normally?

Все каталоги и инструкции здесь: https://splitsystema48.ru/instrukcii-po-ekspluatacii-kondicionerov.html

6 PARTS AND FUNCTIONS

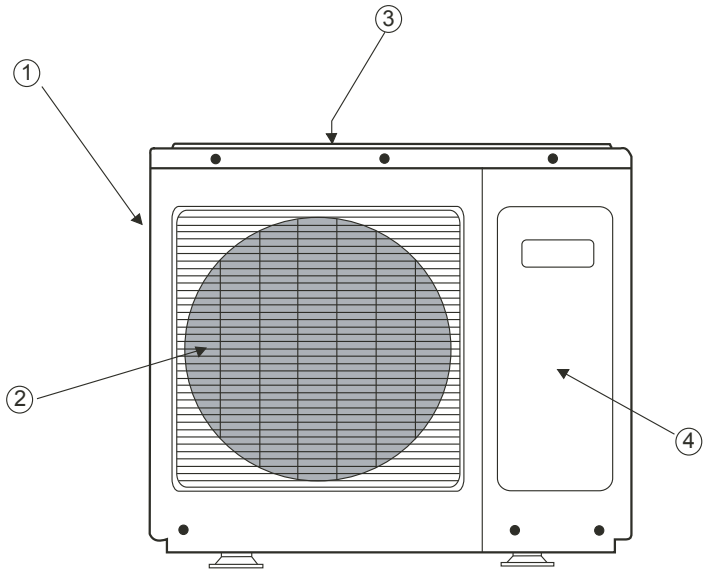

① Air outlet

② Air inlet

④Servicing panel

Все каталоги и инструкции здесь:

7 WIRE OR WIRELESS REMOTE CONTROLLER FUNCTIONS

For detailed information please refer to service manual for AU55NFIAIA .

Все каталоги и инструкции здесь: https://splitsystema48.ru/instrukcii-po-ekspluatacii-kondicionerov.html

8.AU282FHAHA SYSTEM DIAGRAM

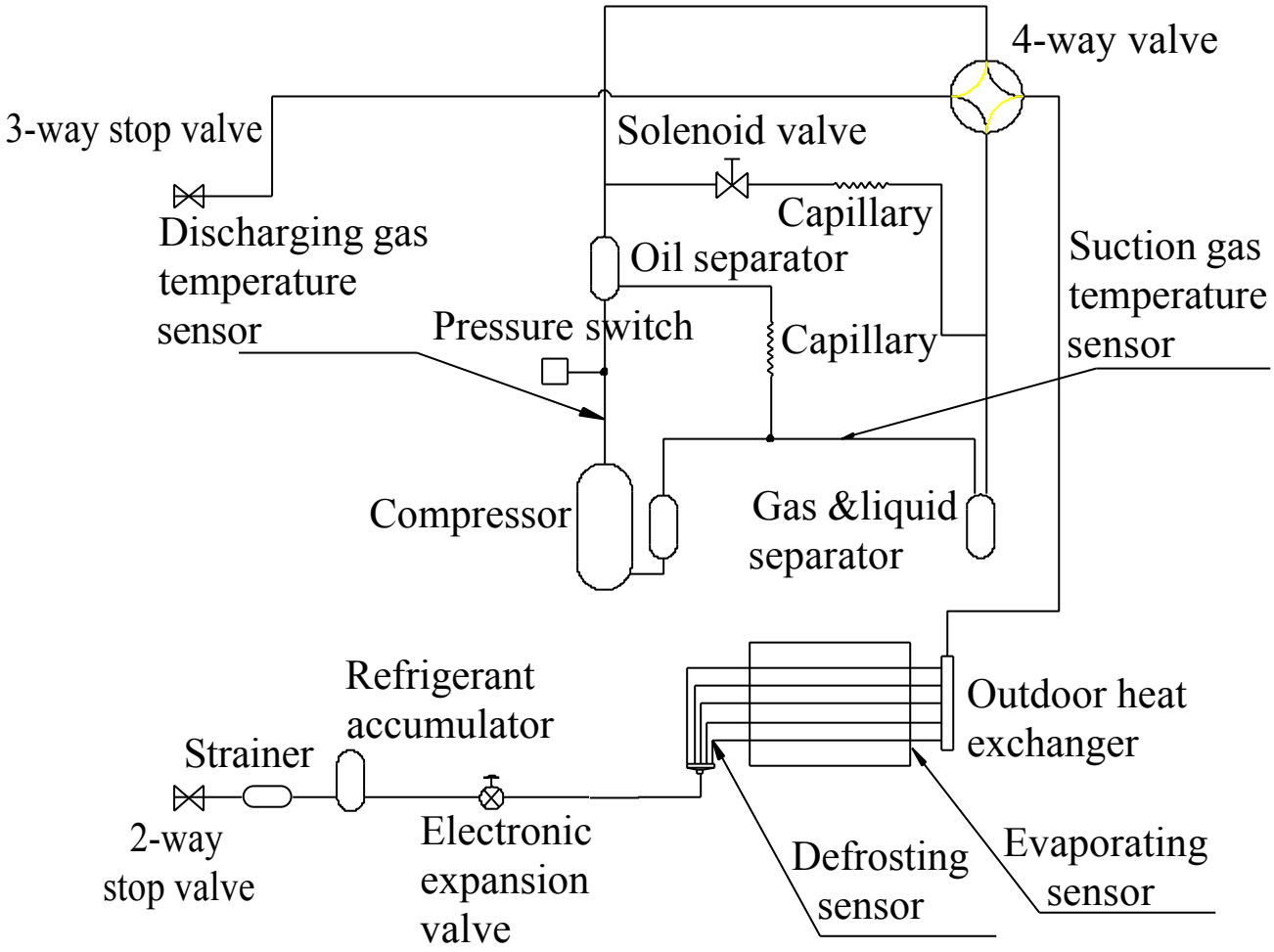

Все каталоги и инструкции здесь: https://splitsystema48.ru/instrukcii-po-ekspluatacii-kondicionerov.html

9 ELECTRICAL CONTROL FUNCTIONS

9.1 Function of special remote controller (Address setting)

1. Read function symbol
   Press “read” button , “1” flashes 1 time

2. Signal emitting symbol
   when “2” flashes ,it shows that remote controller is giving signal to indoor unit.

3. Indoor unit number
   press “8”button to select indoor unit number (1,2,3,4,5or6), then “3” flashes continuously ,press “7” to set indoor unit number

4. Button locked symbol
When “9” is on the state of “ ↗”,press “10”button , “4” appears to show other buttons are locked .press “10”again to cancel

5 Code symbol
press “9”button to select code type , When “5” is on the state of “↘” ,the emitting code to indoor unit is for product made in 1998.

6 Read button
Press this button to give indoor unit signal , the power LED flashes to show indoor unit number.

7 Indoor unit number setting button
When “3” is continuously flashes ,Press this button and give signal to indoor unit to set the number selected.

8 Indoor unit number selection button
use these 6 buttons to select indoor unit number to be set

9 Code selection button
Use this button to select emitting code type
Normally “5” is on the state of “↗”.

10 Lock button
Press this button , “4”appears ,the other buttons will be locked

11 Reset Button
When the remote controller is abnormal , press this button with pointed things to reset.

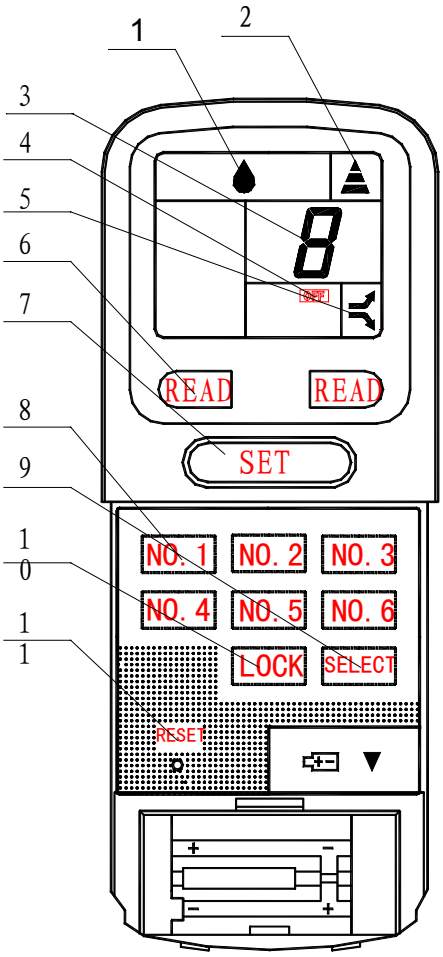

Все каталоги и инструкции здесь: https://splitsystema48.ru/instrukcii-po-ekspluatacii-kondicionerov.html

Function table for address setting controller

power on	After dehumification sign, emission sign, 8 sign, OFF sign, up arrow, down arrow display for 3 minutes, the controller will only display up arrow and down arrow	
power on	partial signs display	dehumification sign, emission sign, 8 sign, OFF sign, up arrow, down arrow
Selection of emission code	press "select" button	new code selection: press "select" button once, there is up arrow in the LCD, which shows the new code will be selected. We always use new code. Old code selection: pree "select" button again, there is down arrow in the LCD, which shows the old code will be selected.
operation of new code setting	read unit code	Press "read" button once, emission sign and deumification sign will keep for 1 second, read the indoor unit number, and observe that the flash time of power lamp of indoor unit should correspond with the data in the LCD.
	set No. 1 unit	Press "No. 1" button, 1 will flash, then press "SET" button at indoor unit. When a sound "du" of indoor unit is heard, unit 1 is set, then press "READ" to confirm if the unit number is right.
	set No. 2 unit	Press "No. 2" button, 2 will flash, then press "SET" button at indoor unit. When a sound "du" of indoor unit is heard, unit 2 is set, then press "READ" to confirm if the unit number is right.
	set No. 3 unit	Press "No. 3" button, 3 will flash, then press "SET" button at indoor unit. When a sound "du" of indoor unit is heard, unit 3 is set, then press "READ" to confirm if the unit number is right.
	set No. 4 unit	Press "No. 4" button, 4 will flash, then press "SET" button at indoor unit. When a sound "du" of indoor unit is heard, unit 4 is set, then press "READ" to confirm if the unit number is right.
	set No. 5 unit	Press "No. 5" button, 5 will flash, then press "SET" button at indoor unit. When a sound "du" of indoor unit is heard, unit 5 is set, then press "READ" to confirm if the unit number is right.
	set No. 6 unit	Press "No. 6" button, 6 will flash, then press "SET" button at indoor unit. When a sound "du" of indoor unit is heard, unit 6 is set, then press "READ" to confirm if the unit number is right.
	set No. 7 unit	Press button 6 and at the same time in 2 seconds press button 1, then loosen them simultaneously. The LCD will display “7”, which stands for selecting unit 7. And then press button “set”, you can set unit 7.Then press "READ" to confirm if the unit number is right.
	set No. 8 unit	Press button 6 and at the same time in 2 seconds press button 2, then loosen them simultaneously. The LCD will display “8”, which stands for selecting unit 8. And then press button “set”, you can set unit 8.Then press "READ" to confirm if the unit number is right.
	lock unit number	Confirm the whole air conditioner work normally, then lock all indoor unit number by "LOCK". The locked unit numbers will not change if without the address setting controller.
	Note: When setting unit number, if indoor unit sounds "du du", which shows this number has exixted in the system, you should set another unit number.	
operration of old code setting	press "select" button	new code selection: press "select" button once, there is up arrow in the LCD, which shows the new code will be selected. We always use new code. Old code selection: pree "select" button again, there is down arrow in the LCD, which shows the old code will be selected.
	read unit code	Press "read" button once, emission sign and deumification sign will keep for 1 second, read the indoor unit number, and observe that the flash time of power lamp of indoor unit should correspond with the data in the LCD.
	set No. 1 unit	Press "No. 1" button, 1 will flash, then press "SET" button at indoor unit. When a sound "du" of indoor unit is heard, unit 1 is set, then press "READ" to confirm if the unit number is right.
	set No. 2 unit	Press "No. 2" button, 2 will flash, then press "SET" button at indoor unit. When a sound "du" of indoor unit is heard, unit 2 is set, then press "READ" to confirm if the unit number is right.
	set No. 3 unit	Press "No. 3" button, 3 will flash, then press "SET" button at indoor unit. When a sound "du" of indoor unit is heard, unit 3 is set, then press "READ" to confirm if the unit number is right.
	set No. 4 unit	Press "No. 4" button, 4 will flash, then press "SET" button at indoor unit. When a sound "du" of indoor unit is heard, unit 4 is set, then press "READ" to confirm if the unit number is right.
	set No. 5 unit	Press "No. 5" button, 5 will flash, then press "SET" button at indoor unit. When a sound "du" of indoor unit is heard, unit 5 is set, then press "READ" to confirm if the unit number is right.

Все каталоги и инструкции здесь: https://splitsystema48.ru/instrukcii-po-ekspluatacii-kondicionerov.html

	set No. 6 unit	Press "No. 6" button, 6 will flash, then press "SET" button at indoor unit. When a sound "du" of indoor unit is heard, unit 6 is set, then press "READ" to confirm if the unit number is right.
	set No. 7 unit	Press button 6 and at the same time in 2 seconds press button 1, then loosen them simultaneously. The LCD will display “7”, which stands for selecting unit 7. And then press button “set”, you can set unit 7.Then press "READ" to confirm if the unit number is right.
	set No. 8 unit	Press button 6 and at the same time in 2 seconds press button 2, then loosen them simultaneously. The LCD will display “8”, which stands for selecting unit 8. And then press button “set”, you can set unit 8.Then press "READ" to confirm if the unit number is right.
	lock unit number	no function
	Note: When setting unit number, if indoor unit sounds "du du", which shows this number has exixted in the system, you should set another unit number.	

Все каталоги и инструкции здесь: https://splitsystema48.ru/instrukcii-po-ekspluatacii-kondicionerov.html

9.1.1 Number setting dialing switch using method(wired remoted control type)

The dialing switch is on indoor unit PCB. The indoor unit number setting method is as follows:

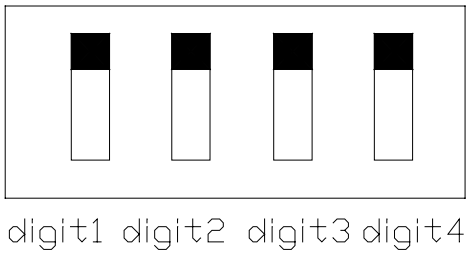

stand for NO.1 indoor unit

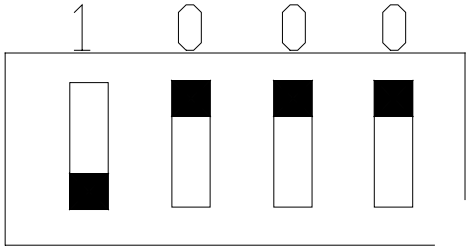

stand for NO.2 indoor unit

Correspondence table between dialing switch and indoor unit numbers

(Note: Bit 4 is useless for setting indoor unit numbers)

Bit 1	Bit 2	Bit 3	Bit 4	Indoor number
0	0	0		1
1	0	0		2
0	1	0		3
1	1	0		4
0	0	1		5
1	0	1		6
0	1	1		7
1	1	1		8

After installation or addition of new indoor unit, it's necessary to set the unit numbers upon initially electrified. For Ceiling concealed duct type indoor unit series, the unit number setting shall be completed with the unit number setting toggle switch on the indoor PC board, see the indoor unit user's manual for setting method. For wall-mounted models series, Cabinet series, Cassette series, Convertible series, unit number setting shall be conducted by installation technicians with the special unit number setting remote controller. (For new-developed indoor unit,number setting method refers to the indoor unit user's manual .The detailed operation procedure is as follows:

(The special remote controller for setting unit number shall be carried by Haier air conditioner installation technicians.)

Все каталоги и инструкции здесь: https://splitsystema48.ru/instrukcii-po-ekspluatacii-kondicionerov.html

9.1.2 Setting in site

- The whole machine has been completely installed and is initially energized.
- Set with the special remote controller within 1 m from the infrared ray receiver on the indoor unit in the following way: press numeric keys on the remote controller according to the desired unit number, the remote controller LCD displays the corresponding number, then press the "UNIT SET" key to send signals.
- When the indoor unit receives the unit number setting signal sent by the special remote controller, the buzzer beeps once indicating the indoor unit has received the unit number setting signal. Set all unit numbers in turn, and confirm all unit numbers after setting with the remote controller "READ" function in the following way: with the remote controller aiming at the indoor unit signal receiver, press the "READ" key on the remote controller, the indoor unit power indicator will flash. The flashing time is just the indoor unit number. (e.g. for a unit number setting of 2, when pressing "READ" key, the power indicator will flash twice.)
- During unit number setting, if duplicate unit numbers are found, the indoor unit buzzer will beep twice to indicate refusal of the unit number setting.
- When setting the unit numbers, in order to avoid setting the same numbers, every two units shall be set with an interval of 10 s so as to allow the indoor unit to automatically identify the repeatedly number setting.
- Please set the unit numbers in sequence and make records so as to avoid repeatedly number setting.
- If the indoor unit shows flashing of power, timer and operation indicators at the same time, it indicates conflict of original addresses between indoor unit and outdoor unit and the necessity to reset the unit number. Upon initially installation, whether the power, indicator and operation indicators flash or not, the indoor unit number shall be set.
- The code selecting function of the unit number setting remote controller may change the emitting code. The up arrow means new emitting code while the down arrow indicates original emitting code. Please select according to necessity.

Все каталоги и инструкции здесь:

9.2 Flow Chart for Operation

(1) Unit number setting

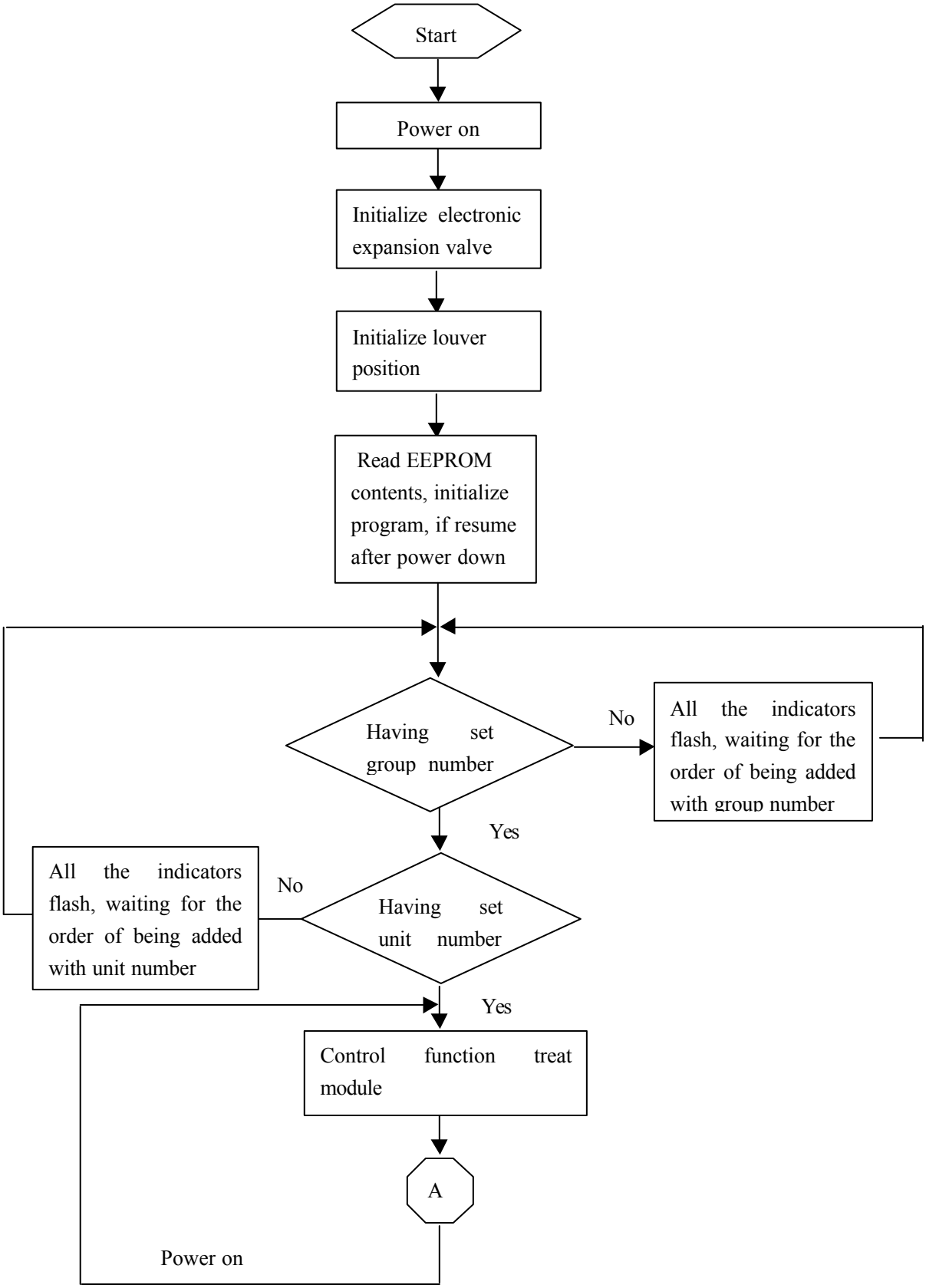

Все каталоги и инструкции здесь: https://splitsystema48.ru/instrukcii-po-ekspluatacii-kondicionerov.html

(2) Turn on/off unit

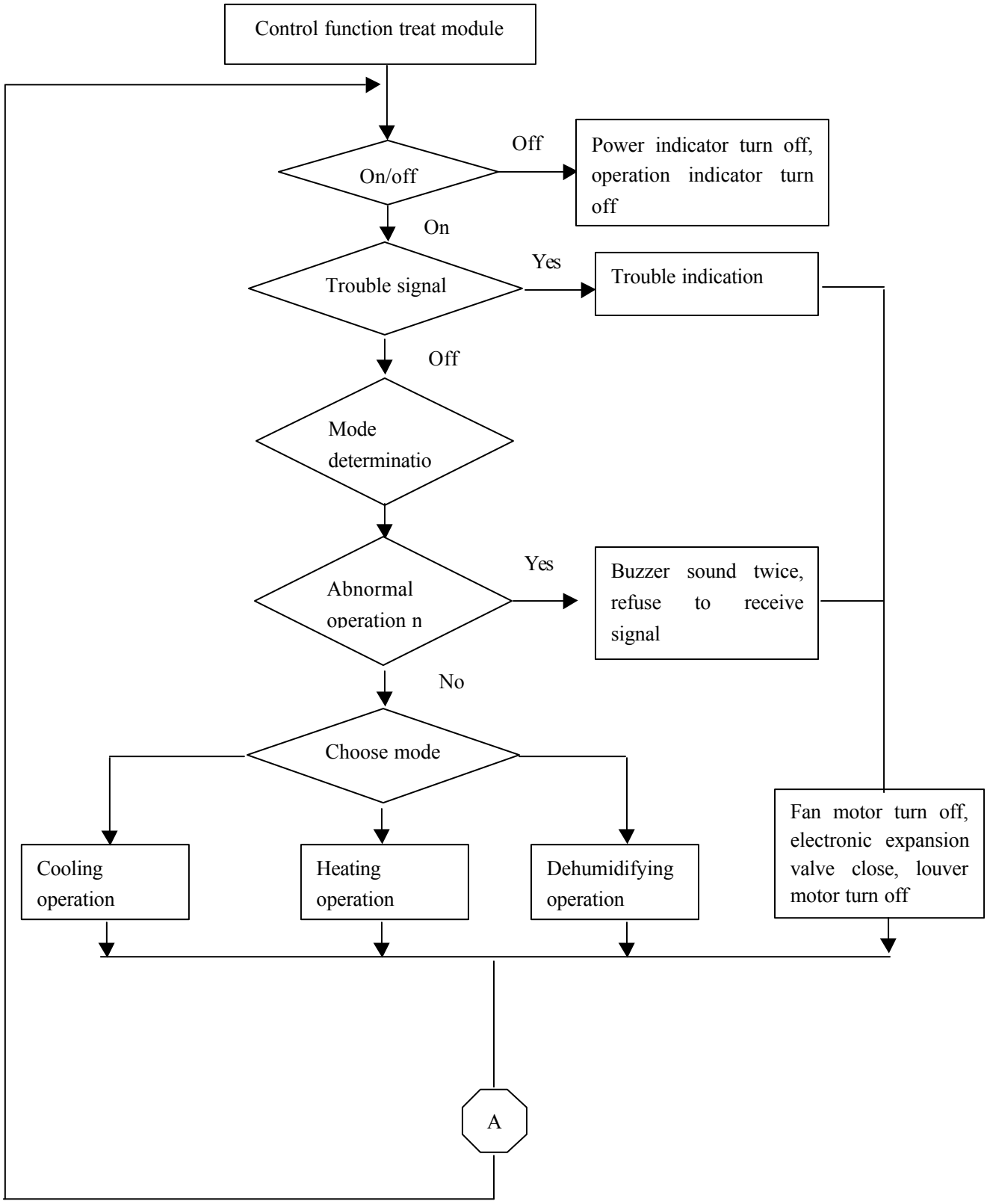

Все каталоги и инструкции здесь: https://splitsystema48.ru/instrukcii-po-ekspluatacii-kondicionerov.html

(3) Cooling operation

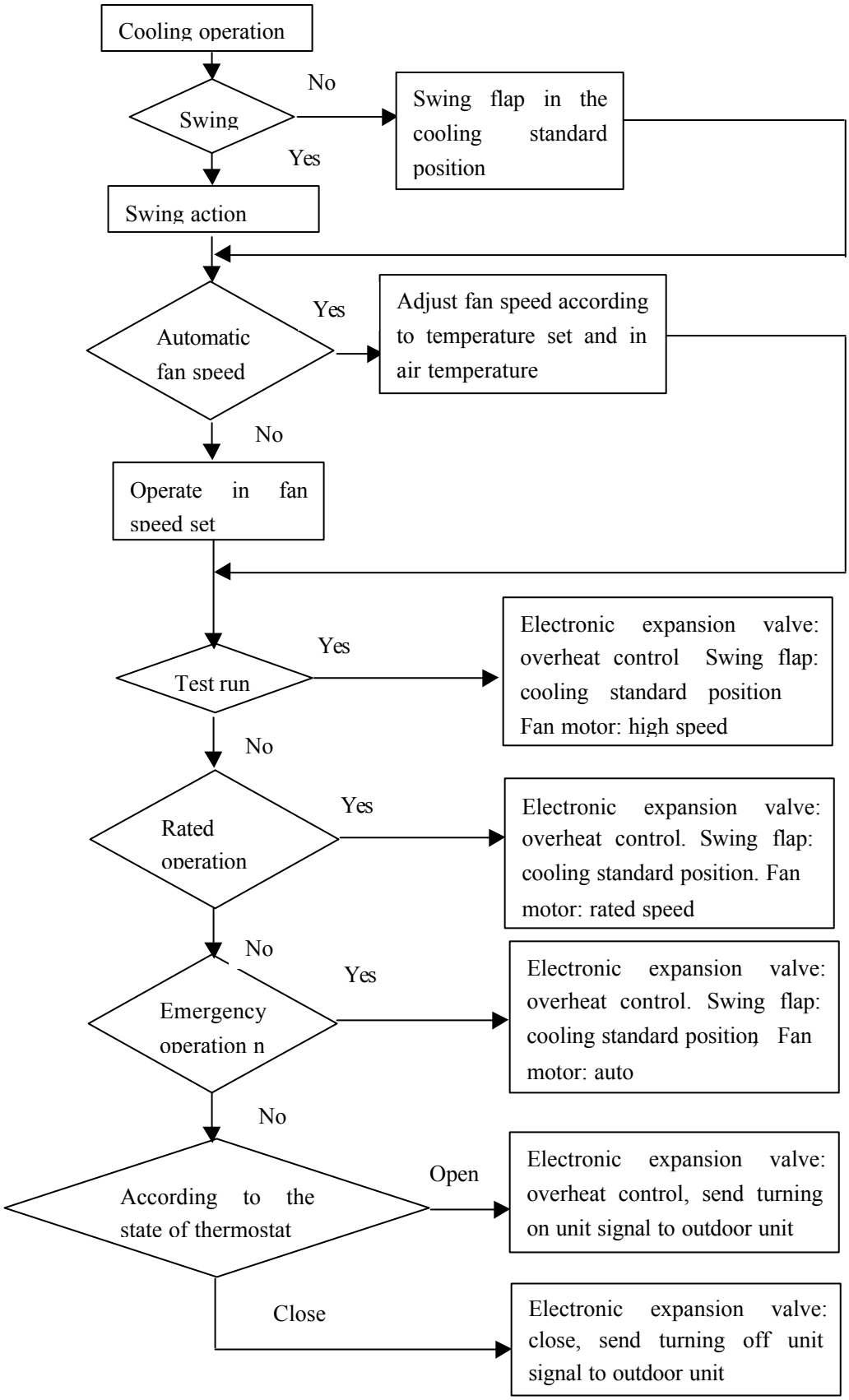

Note: 1. When abnormal phenomenon occur, the indoor unit indicator will indicate abnormality according to the abnormal parts.

2. When temperature of the evaporator inlet is lower than 0℃ and keeps for 5 minutes, unit will operate in anti-icing mode.

Все каталоги и инструкции здесь: https://splitsystema48.ru/instrukcii-po-ekspluatacii-kondicionerov.html

(4) Dehumidifying operation

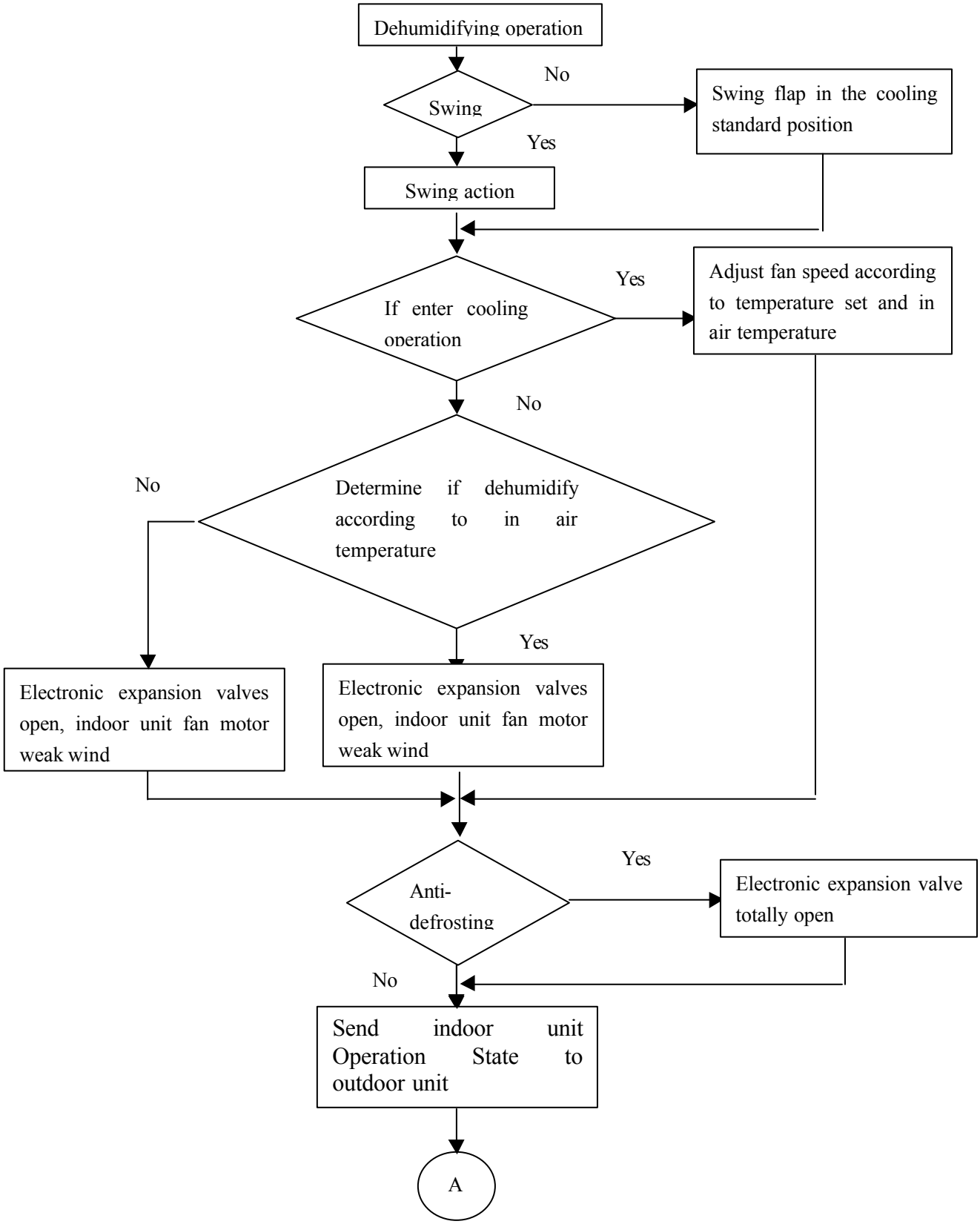

Все каталоги и инструкции здесь: https://splitsystema48.ru/instrukcii-po-ekspluatacii-kondicionerov.html

(5) Heating operation

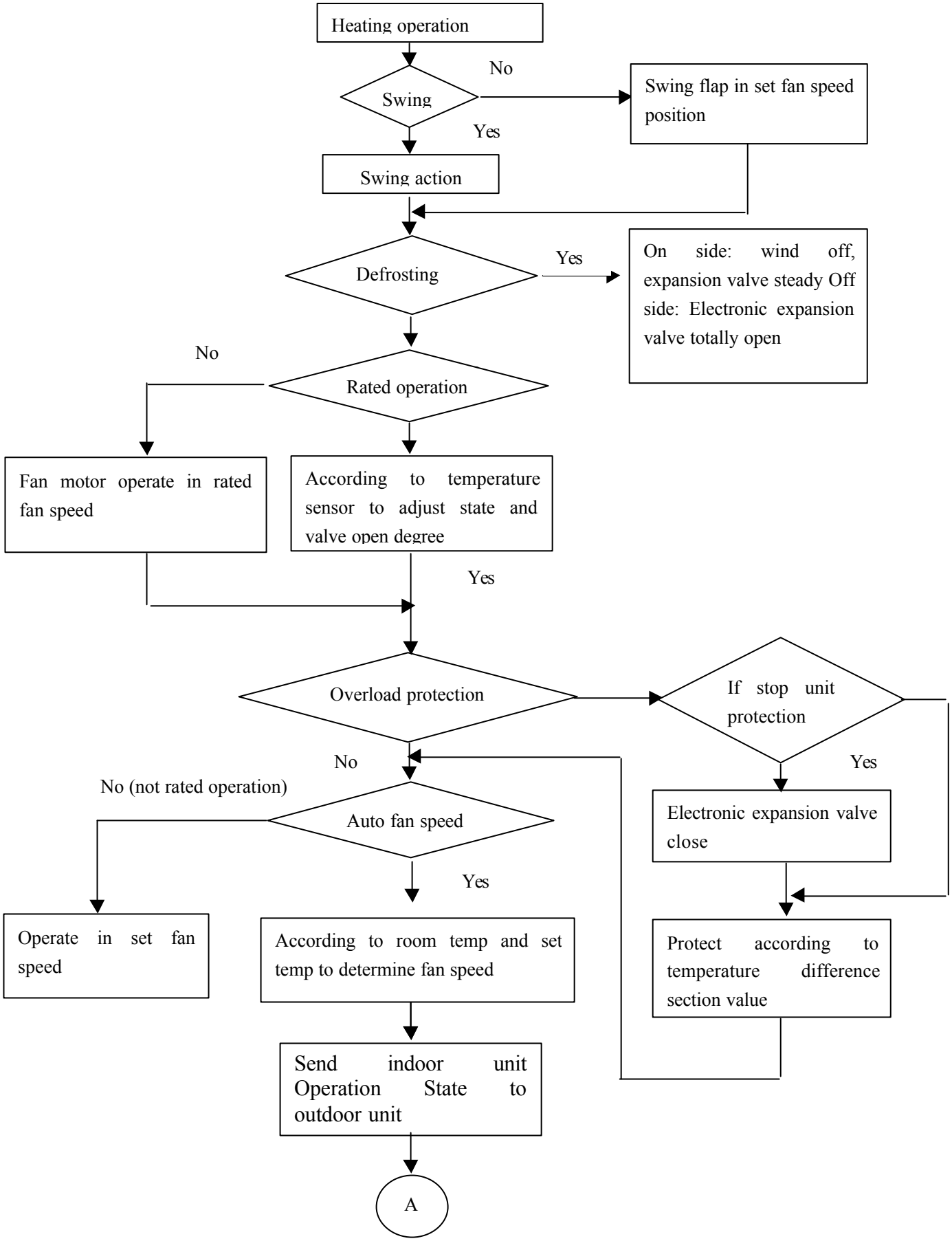

Все каталоги и инструкции здесь: https://splitsystema48.ru/instrukcii-po-ekspluatacii-kondicionerov.html

9.3 Defrost operation Flow Chart

1. The compressor operates heating over 25 minutes, after meeting the defrosting condition, it is permitted to enter defrosting. Defrosting process is unit-stop defrosting mode. Determining condition of defrosting is as follows:

Unit-stop defrosting:

(1) When outdoor ambient temperature Ta is less than 2℃, Ta-Te (defrosting sensor temperature) is more than 9℃, and keeping over 2 minutes, enter unit-stop defrosting.

(2) Outdoor ambient temperature >2℃, pipe coil temperature <15℃ enter unit-stop defrosting.

(3) If meeting the above condition, enter unit-stop defrosting.

(4) First the outdoor unit sends defrosting signal to indoor unit, after receiving signal, the indoor unit acts according to the following condition:

a. The running fan motor of indoor unit for heating stops; the electronic expansion valve does not change.

b. The running fan motor of indoor unit for turning off unit stops; the electronic expansion valves of indoor unit are totally open.

(5) The defrosting action of outdoor unit:

a. The electronic expansion valves are totally open; compressor stops; 4-way valve keeps in heating state; fan motor of outdoor unit is turned off.

b. After 45 seconds, 4-way valve is closed; compressor operates in 58Hz frequency.

c. After the compressor has operated in 58Hz for 30 seconds, it will operate in 120Hz. Only after 3 minutes have elapsed in defrosting state can it quit from this operation.

(6) The condition of quitting from defrosting:

a. After entering defrosting for 3 minutes, test the temperature of defrosting sensor, continue for 1 minute over 12℃, then quit from defrosting.

b. Or after continuously defrosting for over 9 minutes, then quit from defrosting.

c. Discharging air pressure over 2MPaG (G stands for this pressure is piezometer pressure), defrosting over 1 minute.

(7) Actions of indoor & outdoor unit when quitting from defrosting:

a. Compressor stops 43 seconds, fan motor of outdoor unit enter set fan speed according to the state before entering defrosting.

b. After stop 45 seconds, compressor starts, simultaneously 4-way valve enters heating.

c. The open state of outdoors electronic expansion valve enters the state before entering defrosting.

d. Indoor fan speed works in anti-cool Air State.

e. The open state of indoors electronic expansion valve is controlled to start adjusting after defrosting 4 minutes.

(8) The protective treatment in defrosting:

a. Pressure switch not protected

b. The protective function of any temperature sensors is cancelled.

c. After finishing defrosting, discharging air temperature and adjustment of expansion valve open state, current protection etc. work should be carried out according to the state when compressor is just turned on.

Все каталоги и инструкции здесь: https://splitsystema48.ru/instrukcii-po-ekspluatacii-kondicionerov.html

2. Compressor control

The compressor will start at 10Hz and running between 30Hz to 120Hz. In operation the compressor running frequency is determined by three elements : the number of indoor units in operation , the temperature difference of each indoor units between setting temperature and room temperature , the size of each indoor unit.

3. Outdoor fan motor speed control

(Ta: ambient temperature , Tp: outdoor unit pipe temperature)

ITEM	MODE	Ta	Tp	FAN SPEED
1	cooling	≥32 ℃		H
2	cooling	＜32℃	≥45℃	H
3	cooling	＜32℃	40 ℃≤Tp＜45 ℃	M
4	cooling	＜32℃	Tp＜40℃	L
5	heating	≥15 ℃		L
6	heating	10 ℃≤Ta＜15℃		M
7	heating	＜10℃		H

4 Electronic expansion valve control

Each indoor unit has a electronic expansion valve to control refrigerant volume. For split type indoor unit, the valve is designed in a electronic expansion valve box. Indoor unit PCB communicates with the electronic valve box PCB. For other type , the valve is in the indoor unit itself. The electronic expansion valve is controlled as follows:

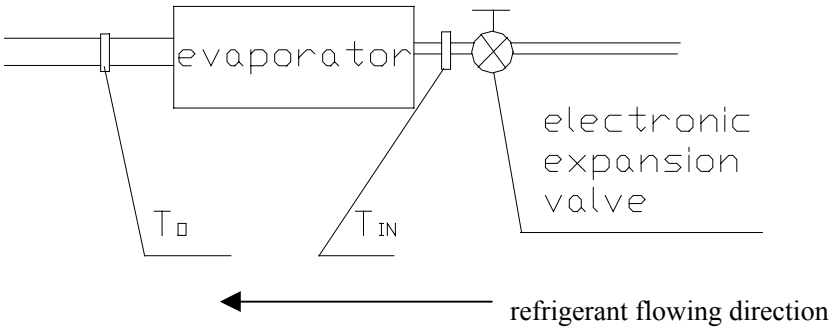

Tin: stands for the liquid refrigerant temperature ; To: stands for the gas refrigerant temperature
Tov: overheat temperature
Overheat temperature is preset in indoor unit PCB. In cooling mode operation ,indoor unit PCB can detect the current overheat temperature by calculating To-Tin.If the To-Tin temperature is higher than Tov, the valve volume will become larger until To-Tin= Tov. In heating operating ,outdoor PCB will control outdoor electronic valve accordingly.

5 All indoor units must operate in the same mode. If the compressor is in heating mode, the indoor unit is not allowed to be set in cooling mode, the outdoor unit will not accept different running mode from indoor unit.

Все каталоги и инструкции здесь: https://splitsystema48.ru/instrukcii-po-ekspluatacii-kondicionerov.html

10.Schedule of trouble

Trouble schedule of indoor unit(Timer light indication)

Flash time of trouble light	Trouble of indoor unit
Timer light flashes 1 time	Thermostat of thin pipe (Ti) is in short circuit or open circuit state
Timer light flashes 2 times	Thermostat of thick pipe (To) is in short circuit or open circuit state
Timer light flashes 3 times	Intake thermostat is in short circuit or open circuit
Timer light flashes 4 times	Abnormal communication with outdoor unit
Timer light flashes 5 times	Abnormal communication with the electronic expansion valve of drive PCB
Timer light flashes 6 times	Abnormal communication between indoor chip 846 and chip 808
Timer light flashes 10 times	Trouble of indoor P/G fan motor
Timer light flashes 12 times	Damage of indoor EEPROM data

Schedule of indoor unit indicating outdoor unit trouble (operation light indication)

Flash time	Trouble of outdoor unit
Operation light flashes 1 time	Thermostat of defrosting is in short circuit or open circuit state
Operation light flashes 2 times	Thermostat of return air is in short circuit or open circuit state
Operation light flashes 3 times	Thermostat of suction air is in short circuit or open circuit
Operation light flashes 4 times	Thermostat of discharging air is in short circuit or open circuit
Operation light flashes 5 times	Thermostat of evaporation is in short circuit or open circuit
Operation light flashes 6 times	Over current alternating current
Operation light flashes 9 times	IPM over current protection (ARM)
Operation light flashes 11 times	Discharging air temperature over heat protection
Operation light flashes 12 times	Communication trouble between the main chip of outdoor unit and 808
Warning light flashes 13 times	Pressure switch protection

Trouble schedule of outdoor unit(outdoor LED2 indication)

Flash times	Trouble of outdoor unit
LED2 light flashes 1 time	Thermostat of defrosting is in short circuit or open circuit state
light flashes 2 times	Thermostat of ambient is in short circuit or open circuit state
light flashes 3 times	Thermostat of suction air is in short circuit or open circuit
light flashes 4 times	Thermostat of discharging air is in short circuit or open circuit
light flashes 5 times	Thermostat of evaporation is in short circuit or open circuit
light flashes 6 times	Over current alternating current
light flashes 7times	Outdoor unit DC voltage is low
light flashes 9 times	IPM over-current,short circuit,over-temp. or DC low voltage protect
light flashes 10 times	Eeprom data error
light flashes 11 times	Discharging air temperature over heat protection
light flashes 12 times	Communication trouble between the main chip of outdoor unit and 808
light flashes 13 times	Pressure switch protection

Все каталоги и инструкции здесь: https://splitsystema48.ru/instrukcii-po-ekspluatacii-kondicionerov.html

10.2 Troubleshooting

(1) Indoor unit trouble indication: timer indicator flashes (once, twice, 3 times, 7 times)
Abnormal reasons:
Heat sensitive resister is short circuit or open circuit
The treatment to sensor output part in PC board is improper, such as poor contact of package part, the electrolytic capacitor for filtering is failed, etc.
Treatment:
Remove the heat sensitive resister, test and measure its numerical value. According to the resister temperature character table to evaluate if it is heat sensitive resister abnormal. If numerical value of resister is normal, check if it is poor contact. If contact is good, replace the indoor unit PC board.
(2) Outdoor unit trouble indication: timer indicator flashes (4 times)
Abnormal reasons:
Communication wire is open circuit or short circuit
There is powerful electromagnetic disturbing source near the air conditioner
The indoor & outdoor unit are not correctly set with unit number
The PC board is improper
Treatments: use the ohm grade of multimeter to check the numerical value of resister between communication wire to determine if it is short circuit or open circuit. If normal, examine if there is powerful electromagnetic disturbing source near the air conditioner, such as radio wave sending devices. After verifying there is no powerful disturbance near air conditioner, reset the unit number of indoor unit and outdoor unit. If there is still abnormal, change the PC board of the trouble indoor & outdoor unit. Please note that after changing the PC board of indoor & outdoor unit, they both should be reset their unit number.
(2) Indoor unit trouble indication: timer indicator flashes (5 times)
Abnormal reasons:
Communication wire is open circuit or short circuit
There is powerful electromagnetic disturbing source near the air conditioner
PC board is improper
Treatments: use the ohm grade of multimeter to check the numerical value of resister between communication wire to determine if it is short circuit or open circuit. If normal, examine if there is powerful electromagnetic disturbing source near the air conditioner, such as radio wave sending devices. After verifying there is no powerful disturbance near air conditioner, change the PC board of abnormal indoor unit or electronic expansion valve driver.
(3) Indoor unit trouble indication: timer indicator flashes (6 times)
Abnormal reasons:
PC board is improper
Treatment: change the improper PC board of indoor unit.
(4) Indoor unit trouble indication: timer indicator flashes (8 times)
Abnormal reasons:
The PC board of electronic expansion valve driver is improper
Treatment: change the PC board of electronic expansion valve driver.
(5) Indoor unit trouble indication: timer indicator flashes (10 times)
Abnormal reasons:
Plastic sealed motor is improper
PC board is improper

Все каталоги и инструкции здесь: https://splitsystema48.ru/instrukcii-po-ekspluatacii-kondicionerov.html

Treatment: use the DC voltage grade of multimeter to test the plastic sealed motor to find if there is any feedback signal, determine if the plastic sealed motor is abnormal. If normal, change the indoor unit PC board.

(6) Indoor unit trouble indication: Timer indicator flashes (12 times)

Abnormal reason:

Indoor unit PC board is improper

Treatment: change the improper indoor unit PC board.

(7) Indoor unit trouble indication: operation indicator flashes (once, twice, 3 times, 4 times, 5 times)

Abnormal reasons:

Heat sensitive resister is short circuit or open circuit

The treatment to sensor output part in PC board is improper, such as poor contact of package part, the electrolytic capacitor for filtering is failed, etc.

Treatment:

Remove the heat sensitive resister, test and measure its numerical value. According to the resister temperature character table to evaluate if it is heat sensitive resister abnormal. If numerical value of resister is normal, check if it is poor contact. If contact is good, replace the indoor unit PC board.

(8) Indoor unit trouble indication: operation indicator flashes (6 times)

Abnormal reasons:

Power voltage is low

Power is instantaneously stopped

Compressor is locked

Treatment: power on again to operate unit, check power voltage (Is the over 40A power used?)

(9) Indoor unit trouble indication: operation indicator flashes (7 times)

Abnormal reasons:

Power voltage is low

Power is instantaneously stopped

Treatment: Treatment: power on again to operate unit, check power voltage (Is the over 40A power used?), check if the power cord is too thin.

(11) Indoor unit trouble indication: operation indicator flashes (8 times)

Abnormal reasons:

The current mutual inductor on the outdoor unit PC board is failed

The driving circuit of compressor is disconnected

Treatment: power on again to operate unit. Test if there is current through the compressor driving circuit. If there is, change the PC board.

(12) Indoor unit trouble indication: operation indicator flashes (9 times)

Abnormal reasons:

High load compelling operation

Power voltage is low

Power is instantaneously lowered or power cut

The driving circuit of compressor is short circuit

Compressor is locked

Treatment: power on again to operate unit. Check if there is too much refrigerant in the cooling system? Check power voltage (Is over 40A power used?) check if there are parts in compressor driving circuit short-circuited? Check if there is any parts damage, poor contact, pull out the connection wire of power module UVW end, test if there is the same voltage between U-V, V-W, W-U? (AC80V-280V)

(13) Indoor unit trouble indication: operation indicator flashes (10 times)

Abnormal reason: PC board of outdoor unit is improper.

Treatment: change PC board of outdoor unit.

(14) Indoor unit trouble indication: operation indicator flashes (11 times)

Abnormal reasons:

System is high load compelling operated

Все каталоги и инструкции здесь: https://splitsystema48.ru/instrukcii-po-ekspluatacii-kondicionerov.html

Refrigerant leaks
Discharging air temperature heat sensitive resistor is improper
Electronic expansion valve or 2-way valve is closed
Treatment: check if there is leakage part, test system pressure in rated operation state to
determine if there is leakage? Check the state of electronic expansion valve and 2-way valve.
Test and measure the numerical value of discharging air temperature heat sensitive resister.

11.ELECTRICAL DATA

11.1 wiring diagram

Все каталоги и инструкции здесь: https://splitsystema48.ru/instrukcii-po-ekspluatacii-kondicionerov.html

OUTDOOR UNIT WIRING DIAGRAM 0010575375

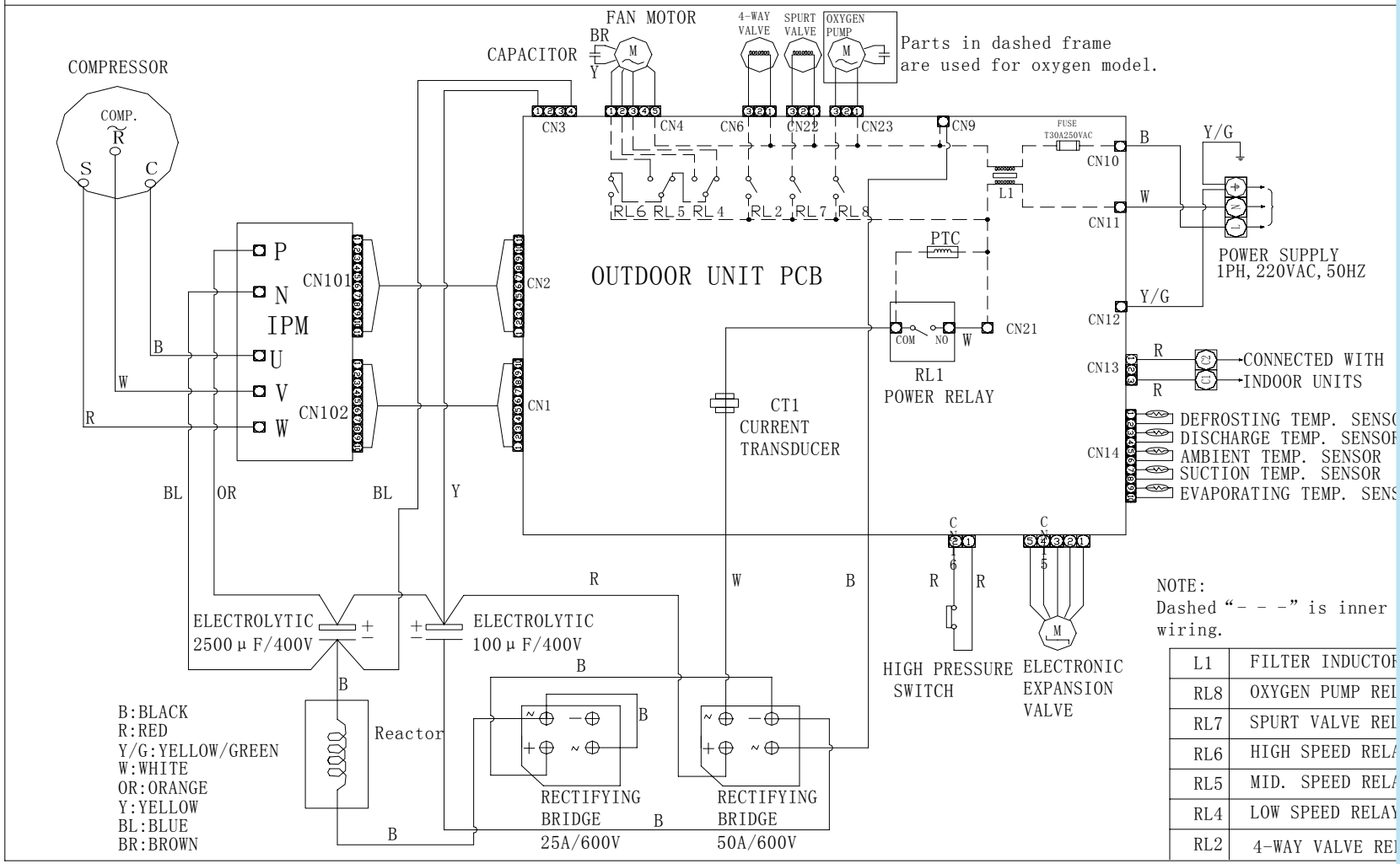

Все каталоги и инструкции здесь: https://

11.2 Some description of fuctions for the outdoor PCB

(1).Function of several pins

Все каталоги и инструкции здесь: https://splitsystema48.ru/instrukcii-po-ekspluatacii-kondicionerov.html

running, debugging,	nding 2 pins is in short circuit state)
HEAT	Outdoor unit cooling forcibly at 50HZ
COOL	Outdoor unit heating forcibly at 55HZ
SS	Timer of program is counted at a proportion of 1/60

(2). Functions of several devices

Position	Device	Description of function
CN17	Touch switch	Raise frequency(1Hz/time)
CN18	Touch switch	Reduce frequency(1Hz/time)
CN19	Socket, white	Communication port for program
SERIAL	Socket, white	Communication port for program

When a notebook PC and debugging program is used, the data bus should be connected to CN19 port or SERIAL port.Thus we can know many running parameters of the unit.It makes the servce work conveniently and easily.

11.3 Resistance-Temperature character

Все каталоги и инструкции здесь: https://splitsystema48.ru/instrukcii-po-ekspluatacii-kondicionerov.html

emperature, evaporator, gas pipe and liquid pipe.

Temperature (℃)	Resistance value (kΩ)	Temperature (℃)	Resistance value (kΩ)
-10	53.0	40	5.5
-5	41.2	45	4.6
0	31.9	50	3.8
5	23.9	55	3.2
10	18.9	60	2.7
15	15.5	65	2.3
20	12.3	70	1.9
25	9.9	75	1.7
30	8.1	80	1.4
35	6.6	85	1.2

Value of the air discharge heat sensitive resistance

Temperature (℃)	Resistance value (kΩ)	Temperature (℃)	Resistance value (kΩ)
15	878.5	85	41.5
20	621.4	90	34.8
25	599.9	95	29.6
30	398.6	100	25.0
40	246.4	105	21.7
50	160.4	110	18.7
60	105.3	115	16.0
70	72.1	120	13.8
75	59.5	125	11.9
80	49.3	130	10.3

Value of the indoor ambient temperature heat sensitive resistance

Temperature (℃)	Resistance value (kΩ)	Temperature (℃)	Resistance value (kΩ)
15	37.5	23	25.3
16	35.7	24	24.1
17	33.9	25	23.0
18	32.2	26	22.0
19	30.7	27	21.0
20	29.2	28	20.0
21	27.9	29	19.1
22	26.5	30	18.2

12. EXPLODED VIEW AND PART LISTS

Все каталоги и инструкции здесь: https://splitsystema48.ru/instrukcii-po-ekspluatacii-kondicionerov.html

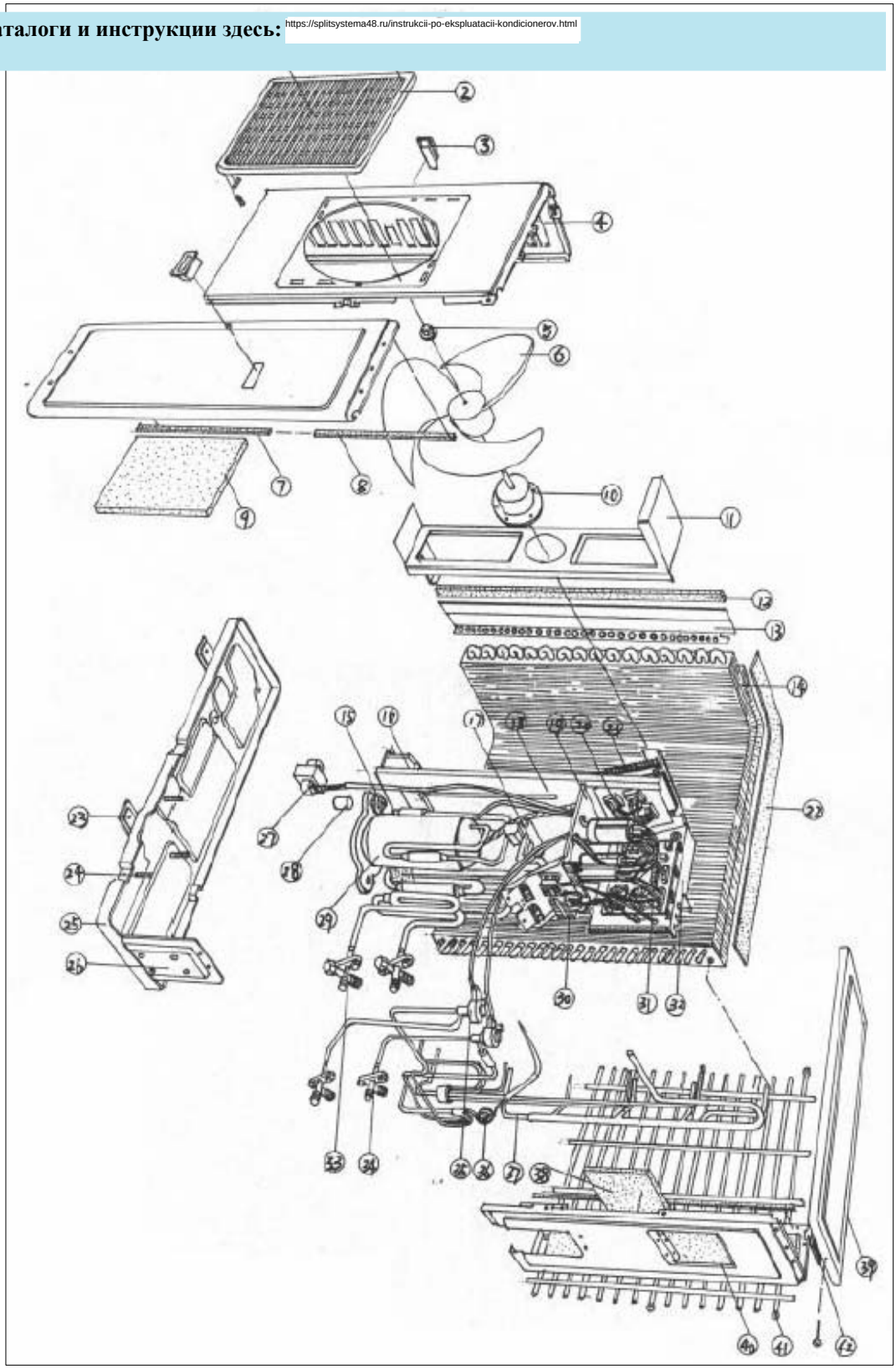

Edition:2005/01/18

No. in view	Spare parts number	Spare parts description in English	Qty.	Model	Failure rate	the proportion of the spare-part stock	Remark
1	001A5002108	Screw	2	AU282FHAHA	0.0000%	0.0000%	X
2	001A0100122	Front guard assy	1	AU282FHAHA	0.0000%	0.0000%	X
			2	AU282FHAHA	0.		
5	001A5102027	Nut	1	AU282FHAHA	0.0000%	0.0000%	X
6	001A5402022	Axial fan	1	AU282FHAHA	0.0200%	0.0240%	*
7	001A0100389	Plate for maintain	1	AU282FHAHA	0.0000%	0.0000%	X
8	001A1742688	PU pad	1	AU282FHAHA	0.0000%	0.0000%	X
9	001A1762756	sound insulation pad	1	AU282FHAHA	0.0000%	0.0000%	X
10	0010450280	Fan motor	1	AU282FHAHA	0.0200%	0.0240%	*
11	001A1301321	Motor mounting bracket	1	AU282FHAHA	0.0000%	0.0000%	X
12	001A1742762	PE	1	AU282FHAHA	0.0000%	0.0000%	X
13	/	/	/	AU282FHAHA	/	/	
14	0010750926	Condenser assy	1	AU282FHAHA	0.0000%	0.0000%	X
15	001A5102050	Flange nut	3	AU282FHAHA	0.0000%	0.0000%	X
16	001A1301470	Cover of reactor	1	AU282FHAHA	0.0000%	0.0000%	X
17	001A2500081	4-way valve	1	AU282FHAHA	0.0000%	0.0000%	X
18	001A0100978	Partition plate	1	AU282FHAHA	0.0000%	0.0000%	X
25	0010150231	Bottom plate	1	AU282FHAHA	0.0000%	0.0000%	X
26	001A1301506	Stop valve seat	1	AU282FHAHA	0.0000%	0.0000%	X
27	001A3800134	Reactor	1	AU282FHAHA	0.0100%	0.0120%	
28	001A17521447	Rubber pad((accessory of compressor)	3	AU282FHAHA	/	/	
29	0010751519	Compressor	1	AU282FHAHA	0.0600%	0.0720%	*
30	001A4000177	Terminal block	1	AU282FHAHA	0.0100%	0.0120%	
31	/	/	/	AU282FHAHA	/	/	
32	/	/	/	AU282FHAHA	/	/	
33	001A2500083	3-way stop valve	1	AU282FHAHA	0.0000%	0.0000%	X
34	001A2500082	2-way stop valve	1	AU282FHAHA	0.0000%	0.0000%	X
35	001A2500085	EEV body	1	AU282FHAHA	0.0100%	0.0120%	*
36	/	/	/	AU282FHAHA	/	/	
37	/	/	/	AU282FHAHA	/	/	X
38	001A1762757	Pad	1	AU282FHAHA	0.0000%	0.0000%	X
39	001A0100264	Top cover assy	1	AU282FHAHA	0.0000%	0.0000%	X
40	001A0100390	Right plate	1	AU282FHAHA	0.0000%	0.0000%	X
41	001A1305112	Guard for heat exchanger	1	AU282FHAHA	0.0000%	0.0000%	X
42	001A1742684	Rubber pad	1	AU282FHAHA	0.0000%	0.0000%	X
43	001A2500127	eletromagnetic valve body	1	AU282FHAHA	0.0000%	0.0000%	Not shown in figure
44	001A21111539	Gas-liquid separator	1	AU282FHAHA	0.0000%	0.0000%	Not shown in figure

Все каталоги и инструкции здесь:

1,The failer rate and the proportion of the spare-part stock are regarded as the reference of the stock for spare-parts;The first time should be stocked accroded with the proportion of the spare-parts,and it should be adjusted with the actual quantity 3 months later.

2,easy-damaged;The spare-part which is often damaged and the customer must stock in the spare-parts warehouse,and should be marked with"*"

3,possible damaged:The spare-part which is not often damaged like the easy damaged one and the customer may stock in the spare-part warehouse accord with the actual case,should be marked with " ".

4,not need provided :The spare-part which is seldom damaged or the maintenance man could not maitmains.The spare parts may be air freighted by the factory if they were damaged.The customer nees not stock in the spare-part warehouse,should be marked with " x ".

5,Above should be improved accord with the reply of the market half a year per time.

6.The spare part price is in terms of FOB Qingdao.

Electrical Parts for AU282FHAHA)

Все каталоги и инструкции здесь: https://splitsystema48.ru/instrukcii-po-ekspluatacii-kondicionerov.html

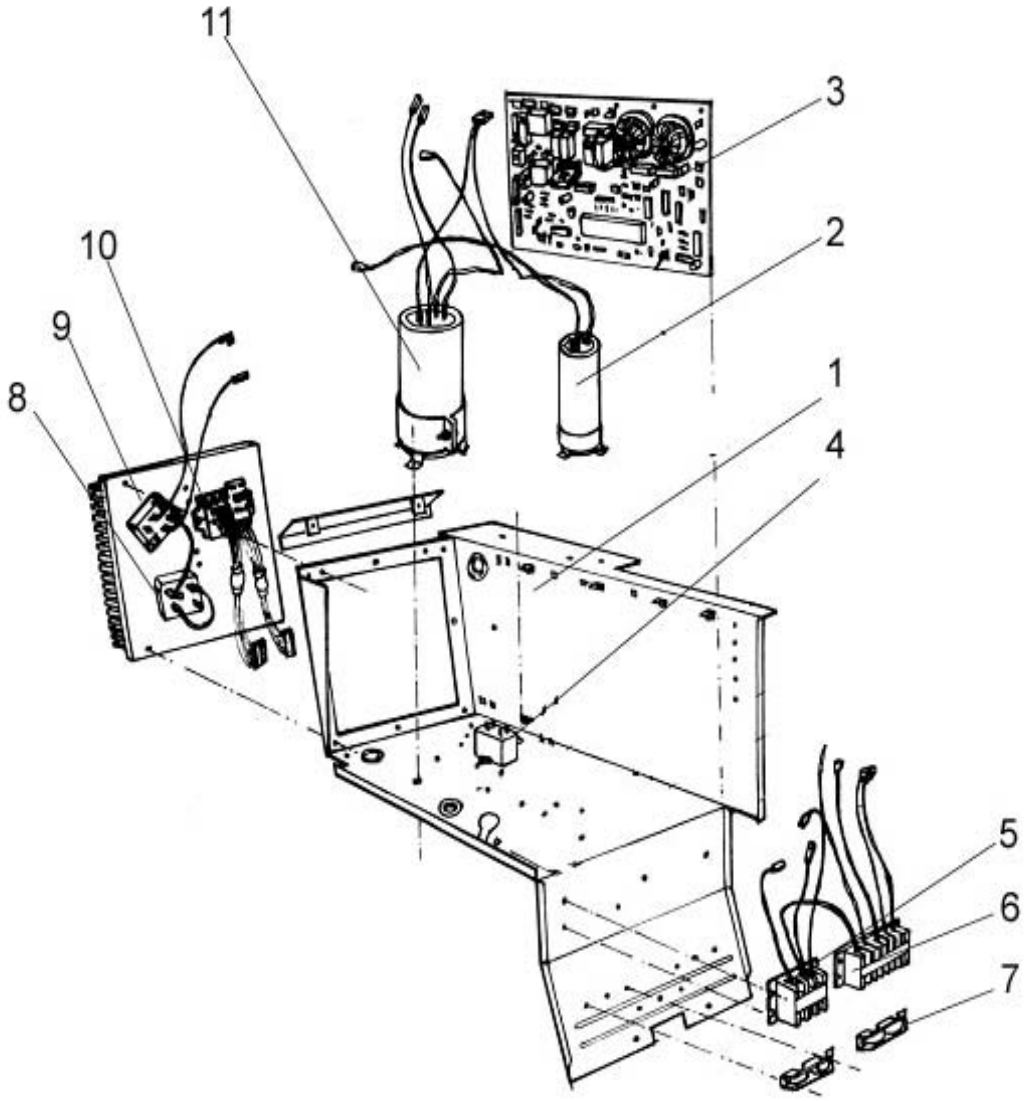

Edition:2005/01/18

Все каталоги и инструкции здесь: https://splitsystema48.ru/instrukcii-po-ekspluatacii-kondicionerov.html

View	number	English			rate	spare-part stock	rk
1	0010850382	Electrical box assembly(containing No.2 to No.12)	1	AU282FHAHA	0.0200%	0.0240%	*
2	001A3600125	Electrolytic capacltor(100uF,400V)	1	AU282FHAHA	0.0300%	0.0360%	*
3	0010450689	Main control PCB	1	AU282FHAHA	0.0200%	0.0240%	*
4	001A3600018	Capacitor for fan motor	1	AU282FHAHA	0.0300%	0.0360%	*
5	001A4000176	Terminal board for power supply(3 bit)	1	AU282FHAHA	0.0100%	0.0120%	
6	001A4000177	Terminal board(6 bit)	1	AU282FHAHA	0.0100%	0.0120%	
7	001A5731054	Power lines clip	2	AU282FHAHA	0.0000%	0.0000%	X
8	001A3700023	Rectifier(50A)	1	AU282FHAHA	0.0100%	0.0120%	*
9	001A3700015	Rectifier(25A)	1	AU282FHAHA	0.0000%	0.0000%	*
10	0010450352	Power module assembly	1	AU282FHAHA	0.0200%	0.0240%	*
11	001A3600129	Electrolytic capacltor(2500uF,400V)	1	AU282FHAHA	0.0300%	0.0360%	*
12	0010800014	5 thermistors with only one 10-pin connector(including defrosting,evaporating,suction,discharging and ambient sensors)	1	AU282FHAHA	0.0200%	0.0240%	*
13	001A3400138	High pressure switch	1	AU282FHAHA	0.0100%	0.0120%	X
14	0010400028	Coil for spray solenoid valve	1	AU282FHAHA	0.0100%	0.0120%	X
15	001A2500076	Coil for 4-way valve	1	AU282FHAHA	0.0100%	0.0120%	X
16	001A2500087	Coil for EEV	1	AU282FHAHA	0.0100%	0.0120%	X

1,The failer rate and the proportion of the spare-part stock are regarded as the reference of the stock for spare-parts;The first time should be stocked accroded with the proportion of the spare-parts,and it should be adjusted with the actual quantity 3 months later.

2,easy-damaged;The spare-part which is often damaged and the customer must stock in the spare-parts warehouse,and should be marked with"*"

3,possible damaged:The spare-part which is not often damaged like the easy damaged one and the customer may stock in the spare-part warehouse accord with the actual case,should be marked with " ".

4,not need provided :The spare-part which is seldom damaged or the maintenance man could not maitmains.The spare parts may be air freighted by the factory if they were damaged.The customer nees not stock in the spare-part warehouse,should be marked with " x ".

5,Above should be improved accord with the reply of the market half a year per time.

6.The spare part price is in terms of FOB Qingdao .

Note: Parts from NO.12 to NO. 16 listed above are not shown in the pictures here.

13. Characteristics of refrigerating and heating capacity

1) Calculation method

Calculation method of refrigerating capacity-Refrigerating capacity to be known = Refrigerating

Все каталоги и инструкции здесь: https://splitsystema48.ru/instrukcii-po-ekspluatacii-kondicionerov.html

air wet-bulb temperature condition

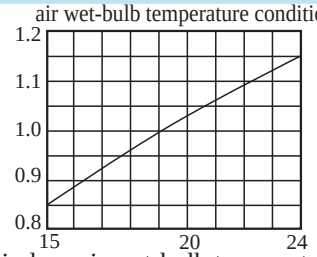

indoor air wet-bulb temperature(*)

temperature condition

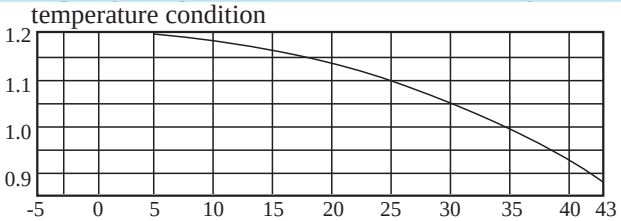

outdoor air dry-bulb temperature(*)

odification value under airflow variation rate of indoor unit group (only for airflow type unit)

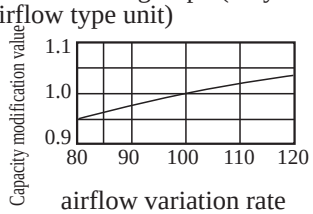

airflow variation rate

(4) Fall of refrigerant pipe of indoor and outdoor unit, capacity compensation value of pipe length

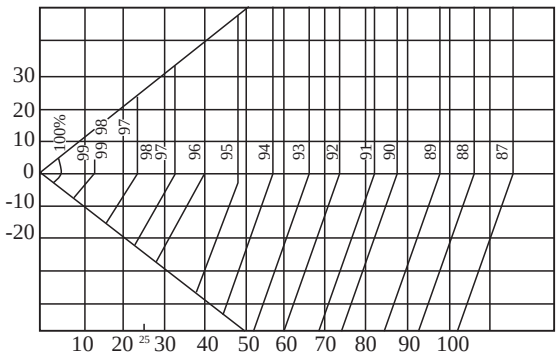

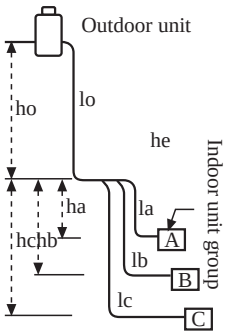

L(m) Length of refrigerant pipe (corresponding length) L (m)

(5) Capacity compensation suitable for total capability of indoor unit group (cooling)

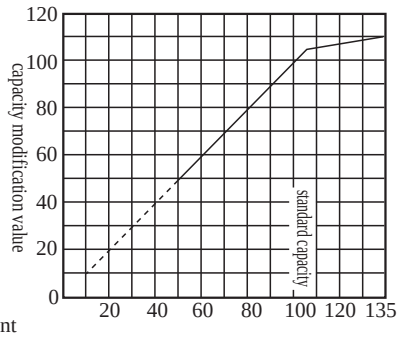

Total capacity of indoor unit group

2) Calculation method of heating capacity—Heating capacity to be known = Heating capacity ((1) x (2) x (3) x (4) x (5) x (6)) W

(1) Capacity modification under indoor air wet-bulb temperature condition

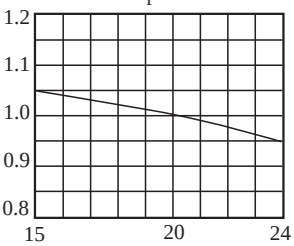

indoor air dry-bulb temperature(*)

(2) Capacity modification under outdoor air wet-bulb temperature condition

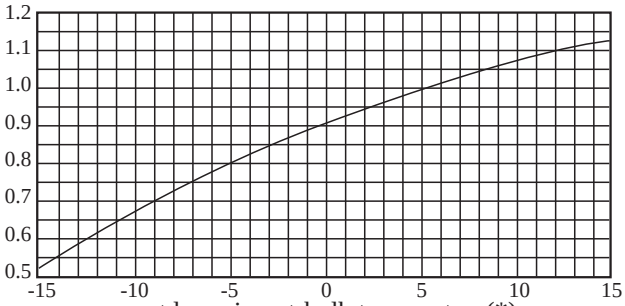

outdoor air wet-bulb temperature(*)

(3) Capacity modification value under airflow variation rate of indoor unit group

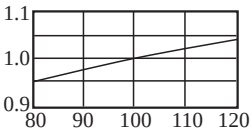

(4) Fall of refrigerant pipe of indoor and outdoor unit, capacity compensation value of pipe length

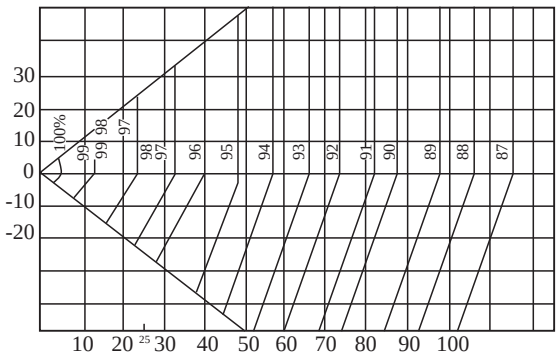

Length of refrigerant pipe (corresponding length) L (m)

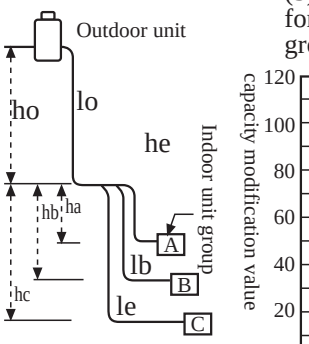

H=ho+(the max. value of ha, hb, hc)
L=lo+(the max. value of la, lb, lc)

(5) Capacity compensation suitable for total capability of indoor unit group (heating)

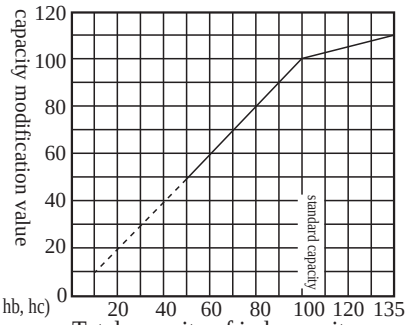

Total capacity of indoor unit group

14.Noise level curve for model AU282FHAHA

1. The data are based on the following conditions：

(1) The data are measured in half- elimination laboratory；

Все каталоги и инструкции здесь: https://splitsystema48.ru/instrukcii-po-ekspluatacii-kondicionerov.html

(3) Working mode: cooling

(4) Indoor temperature: 27℃DB,19℃WB;

Outdoor temperature: 35℃DB,24℃WB

Power supply: 220VAC，1Ph, 50Hz

（5）Noise level in dB（A）

Outdoor fan speed	Noise level(dB（A）)
H	57
M	/
L	/

(6) Sound sensor(mike) quantity: 3

Measure positions are as below,and the height of 3 mikes is equal to half of the sum of outdoor unit height and1000mm.

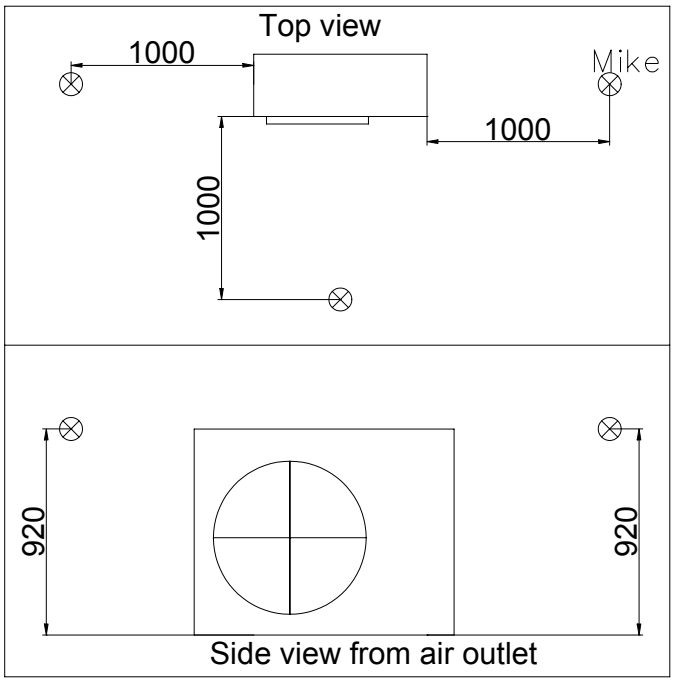

Note: The noise levels measured in the field are usually higher than the data because of reflection.

2. Noise level curve

Все каталоги и инструкции здесь: https://splitsystema48.ru/instrukcii-po-ekspluatacii-kondicionerov.html

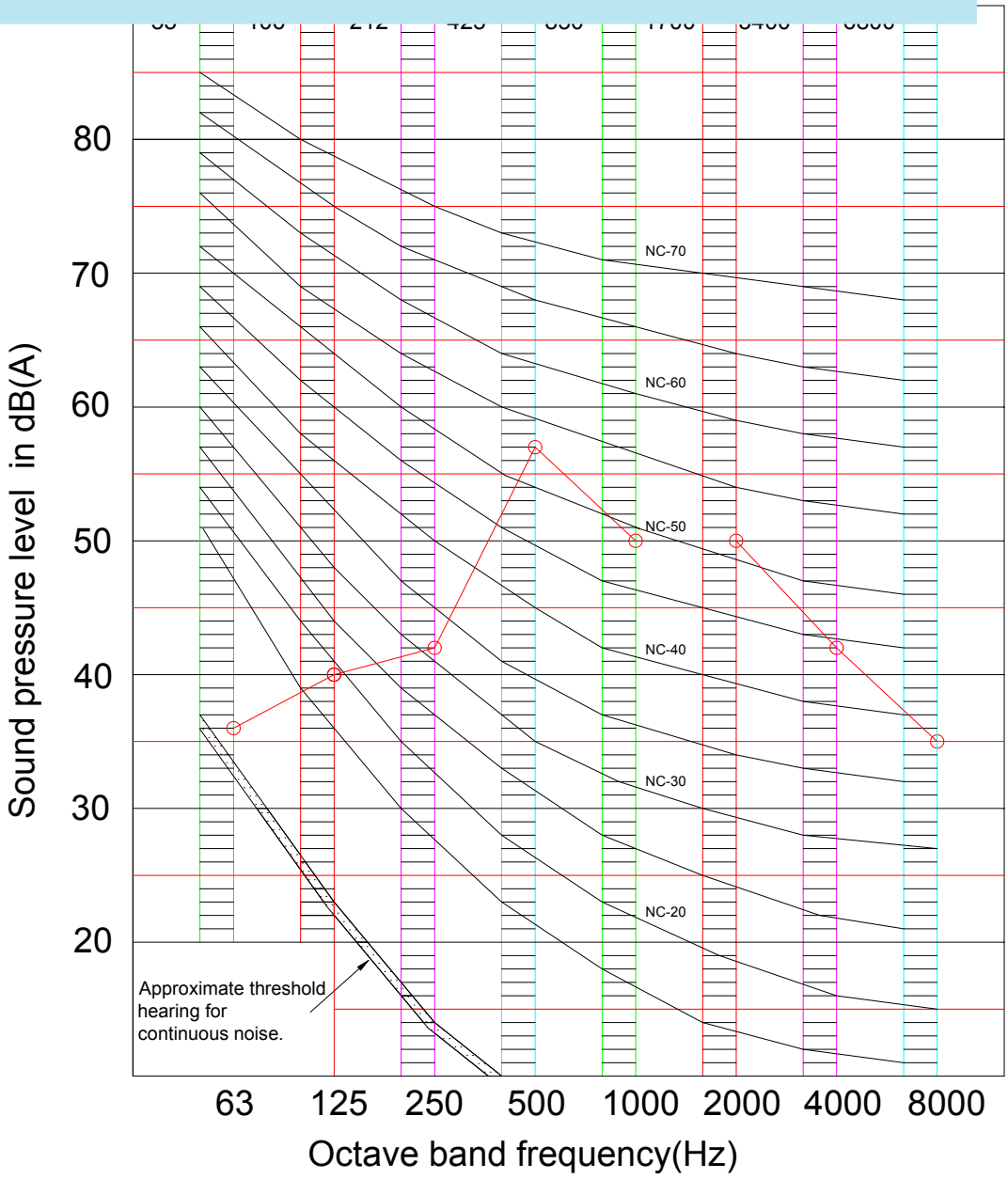

Noise level curve for model AU282FHAHA

Sincere Forever

Haier Group

Haier Industrial Park, No.1, Haier Road

266101, Qingdao, China

http://www.haier.com

splitoff.ru

Большая библиотека технической документации

https://splitsystema48.ru/instrukcii-po-ekspluatacii-kondicionerov.html

каталоги, инструкции, сервисные мануалы, схемы.